Features

- 1206 1.1mm SMD LED
- High Brightness
- AlInGaP / InGaN Technology
- Small package
- High reliability
- Clear Lens

Applications

- Consumer Electronics
- Wearables
- Automobile After Market
- Industrial Equipment

Description

The IN-S126AT series is a popular low profile 1206 package with versatile design capabilities. It is a PCB type molding style LED which can be used in various applications.

Recommended Solder Pattern

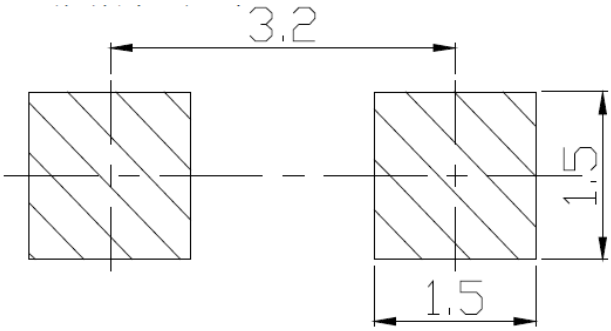

Figure 1. IN-S126AT Solder Pattern

Package Dimensions in mm

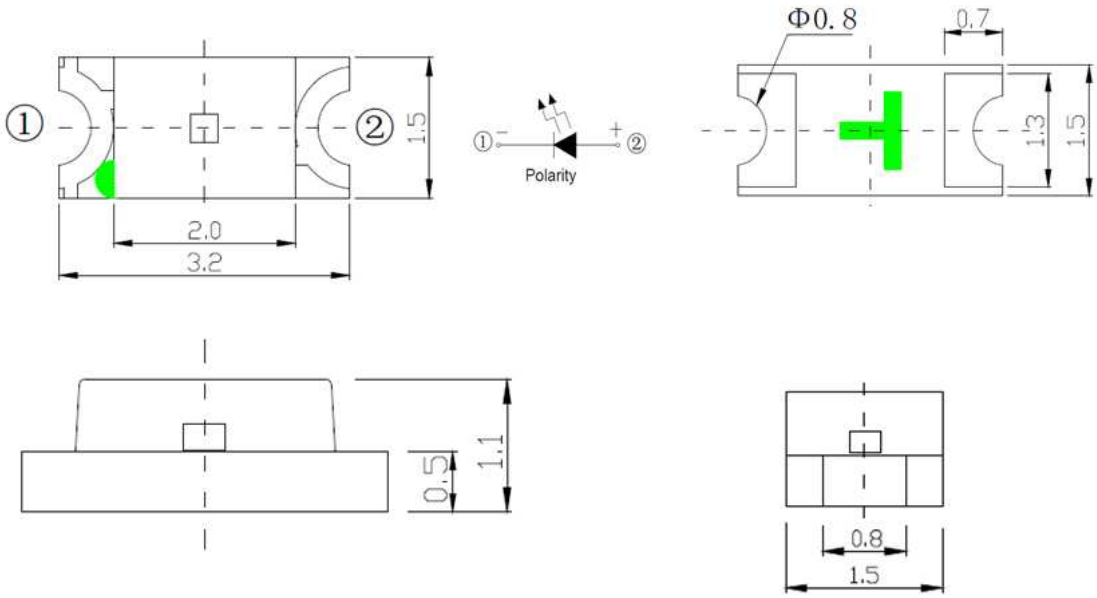

Figure 2. IN-S126AT Package Dimensions

Absolute Maximum Rating at 25°C (Note 1)

Product	Emission Color	P_d (mW)	I_F (mA)	I_{FP}* (mA)	V_R (V)	T_{OP} (°C)	T_{ST} (°C)
IN-S126ATYG	Yellow Green	75	25	70	5	-30°C~+85°C	-40°C~+90°C
IN-S126ATY	Yellow						
IN-S126ATA	Amber						
IN-S126ATR	Red						
IN-S126ATB	Blue	75	25	100			
IN-S126ATG	Green						
IN-S126AT5UW	White						

Notes
1. Condition for IFP is pulse of 1/10 duty and 0.1msec width

ESD Precaution

ATTENTION: Electrostatic Discharge (ESD) protection

The symbol above denotes that ESD precaution is needed. ESD protection for GaP and AlGaAs based chips is necessary even though they are relatively safe in the presence of low static-electric discharge. Parts built with AlInGaP, GaN, or/and InGaN based chips are STATIC SENSITIVE devices. ESD precaution must be taken during design and assembly.
If manual work or processing is needed, please ensure the device is adequately protected from ESD during the process.

Please be advised that normal static precautions should be taken in the handling and assembly of this device to prevent damage or degradation which may be induced by electrostatic discharge (ESD).

Electrical Characteristics $T_A = 25℃$ (Note 1)

Product	Emission Color	I_F(mA)	V_F(V)		λ(nm)			Viewing Angel	I^*_V(mcd)
			min.	max	λ_D	λ_P	△λ	$2\theta_{1/2}$	typ.
IN-S126ATYG	Yellow Green	20	1.8	2.6	573	576	15	120	35
IN-S126ATY	Yellow	20	1.8	2.6	591	594	15	120	120
IN-S126ATA	Amber	20	1.8	2.6	605	610	17	120	140
IN-S126ATR	Red	20	1.8	2.6	622	630	20	120	140
IN-S126ATB	Blue	20	2.8	3.6	468	472	30	120	140
IN-S126ATG	Green	20	2.8	3.6	520	526	35	120	560
IN-S126AT5UW	White	5	2.8	3.6	X=0.29 Y=0.29	-	-	120	180

Notes

1. Performance guaranteed only under conditions listed in above tables.

Chromaticity Bin (for White only)

Bin Code	CIE-X	CIE-Y	Bin Code	CIE-X	CIE-Y	Bin Code	CIE-X	CIE-Y	Bin Code	CIE-X	CIE-Y
A5	0. 2545	0. 2480	B1	0. 2640	0. 2670	C1	0. 2830	0. 3050	D1	0. 2920	0. 3060
	0. 2589	0. 2445		0. 2680	0. 2623		0. 2863	0. 2978		0. 2935	0. 3015
	0. 2680	0. 2623		0. 2772	0. 2800		0. 2923	0. 3052		0. 2997	0. 3088
	0. 2640	0. 2670		0. 2735	0. 2860		0. 2895	0. 3134		0. 2984	0. 3133
A6	0. 2589	0. 2445	B2	0. 2720	0. 2575	C2	0. 2863	0. 2978	D2	0. 2935	0. 3015
	0. 2633	0. 2410		0. 2680	0. 2623		0. 2895	0. 2905		0. 2950	0. 2970
	0. 2720	0. 2575		0. 2772	0. 2800		0. 2950	0. 2970		0. 3009	0. 3042
	0. 2680	0. 2623		0. 2808	0. 2740		0. 2923	0. 3052		0. 2997	0. 3088
A7	0. 2677	0. 2375	B3	0. 2720	0. 2575	C3	0. 2895	0. 2905	D3	0. 2950	0. 2970
	0. 2633	0. 2410		0. 2760	0. 2528		0. 2928	0. 2833		0. 2965	0. 2925
	0. 2720	0. 2575		0. 2844	0. 2680		0. 2977	0. 2891		0. 3023	0. 2990
	0. 2760	0. 2528		0. 2808	0. 2740		0. 2950	0. 2970		0. 3009	0. 3042
A8	0. 2720	0. 2340	B4	0. 2760	0. 2528	C4	0. 2928	0. 2833	D4	0. 2965	0. 2925
	0. 2677	0. 2375		0. 2844	0. 2680		0. 2977	0. 2891		0. 2980	0. 2880
	0. 2760	0. 2528		0. 2880	0. 2620		0. 3003	0. 2812		0. 3037	0. 2937
	0. 2800	0. 2480		0. 2800	0. 2480		0. 2960	0. 2760		0. 3023	0. 2990
E1	0. 2984	0. 3133	B5	0. 2735	0. 2860	C5	0. 2883	0. 3172	D5	0. 2937	0. 3312
	0. 2997	0. 3088		0. 2772	0. 2800		0. 2870	0. 3210		0. 2950	0. 3266
	0. 3058	0. 3160		0. 2863	0. 2978		0. 2937	0. 3312		0. 3017	0. 3360
	0. 3048	0. 3207		0. 2830	0. 3050		0. 2950	0. 3266		0. 3005	0. 3415
E2	0. 2997	0. 3088	B6	0. 2772	0. 2800	C6	0. 2883	0. 3172	D6	0. 2950	0. 3266
	0. 3009	0. 3042		0. 2808	0. 2740		0. 2950	0. 3266		0. 2962	0. 3220
	0. 3068	0. 3113		0. 2895	0. 2905		0. 2962	0. 3220		0. 3028	0. 3304
	0. 3058	0. 3160		0. 2863	0. 2978		0. 2895	0. 3134		0. 3017	0. 3360
E3	0. 3009	0. 3042	B7	0. 2808	0. 2740	C7	0. 2895	0. 3134	D7	0. 2962	0. 3220
	0. 3023	0. 2990		0. 2844	0. 2680		0. 2908	0. 3097		0. 2973	0. 3177
	0. 3081	0. 3053		0. 2928	0. 2833		0. 2973	0. 3177		0. 3038	0. 3256
	0. 3068	0. 3113		0. 2895	0. 2905		0. 2962	0. 3220		0. 3028	0. 3304
E4	0. 3023	0. 2990	B8	0. 2844	0. 2680	C8	0. 2908	0. 3097	D8	0. 2973	0. 3177
	0. 3037	0. 2937		0. 2928	0. 2833		0. 2920	0. 3060		0. 2984	0. 3133
	0. 3093	0. 2993		0. 2960	0. 2760		0. 2984	0. 3133		0. 3048	0. 3207
	0. 3081	0. 3053		0. 2880	0. 2620		0. 2973	0. 3177		0. 3038	0. 3256
Z2	0. 25	0. 251	Z3	0. 26	0. 271	Z4	0. 27	0. 291	Z5	0. 28	0. 311
	0. 26	0. 271		0. 27	0. 291		0. 28	0. 311		0. 2871	0. 321
	0. 264	0. 267		0. 2735	0. 286		0. 283	0. 305		0. 2895	0. 3134
	0. 2545	0. 248		0. 264	0. 267		0. 2735	0. 286		0. 283	0. 305
A1	0. 2497	0. 2267	A2	0. 2497	0. 2267	A3	0. 2593	0. 2223	A4	0. 2640	0. 2200
	0. 245	0. 229		0. 2589	0. 2445		0. 2677	0. 2375		0. 2593	0. 2223
	0. 2545	0. 248		0. 2633	0. 241		0. 2633	0. 2410		0. 2677	0. 2375
	0. 2589	0. 2445		0. 2545	0. 2245		0. 2545	0. 2245		0. 2720	0. 2340
Z1	0. 24	0. 231									
	0. 25	0. 251									
	0. 2545	0. 248									
	0. 245	0. 2291									

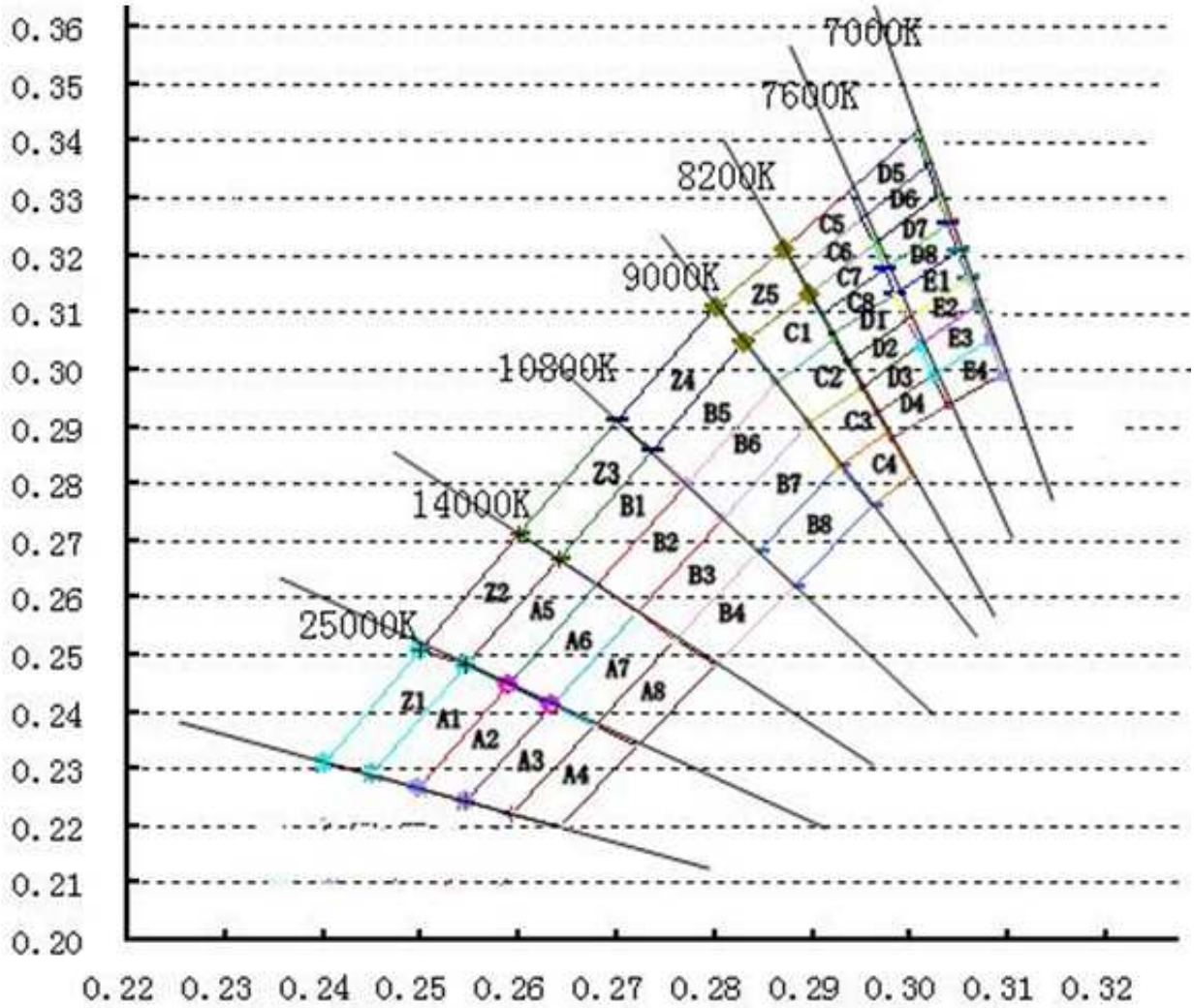
0.36
0.35
0.34
0.33
0.32
0.31
0.30
0.29
0.28
0.27
0.26
0.25
0.24
0.23
0.22
0.21
0.20
0.22 0.23 0.24 0.25 0.26 0.27 0.28 0.29 0.30 0.31 0.32
7000K
7600K
8200K
9000K
10800K
14000K
25000K
Z1 Z2 Z3 Z4 Z5
A1 A2 A3 A4 A5 A6 A7 A8
B1 B2 B3 B4 B5 B6 B7 B8
C1 C2 C3 C4 C5 C6 C7 C8
D1 D2 D3 D4 D5 D6 D7 D8
E1 E2 E3 E4

Typical Characteristic Curves – YG, Y, A, R

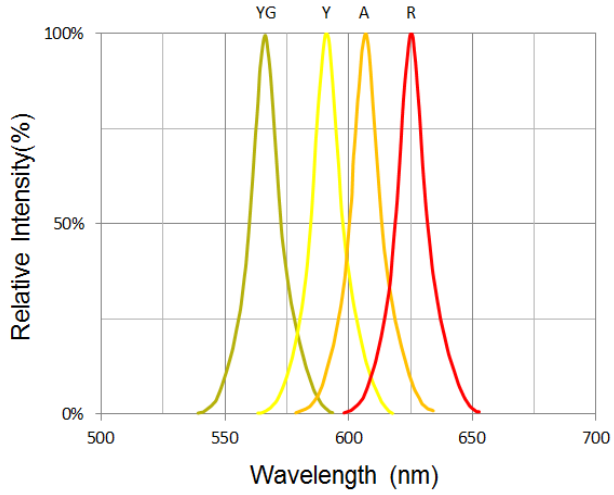

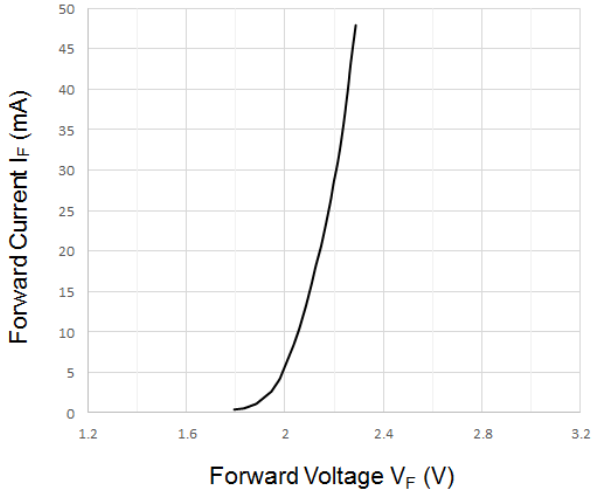

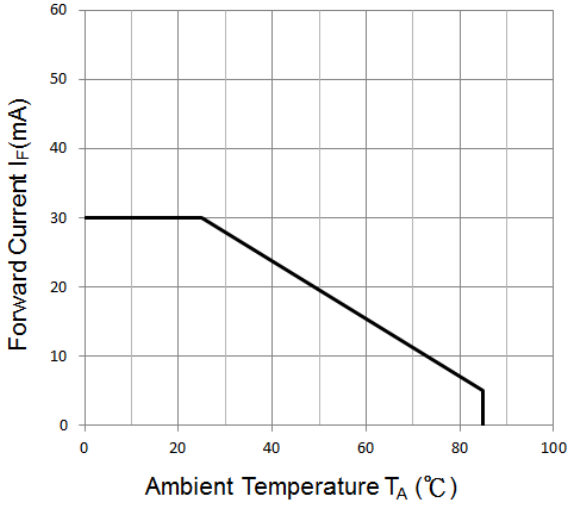

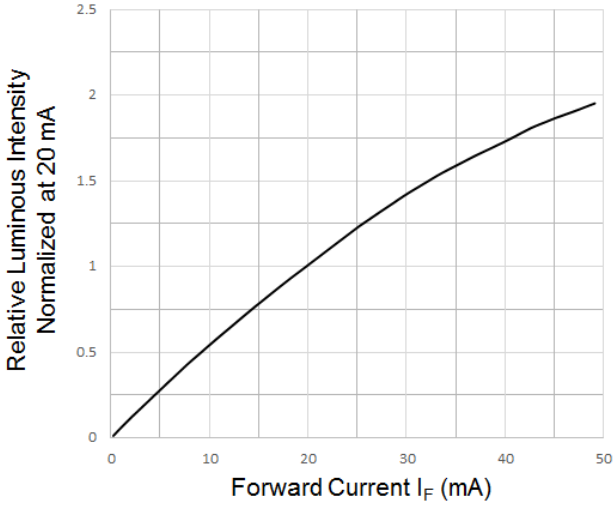

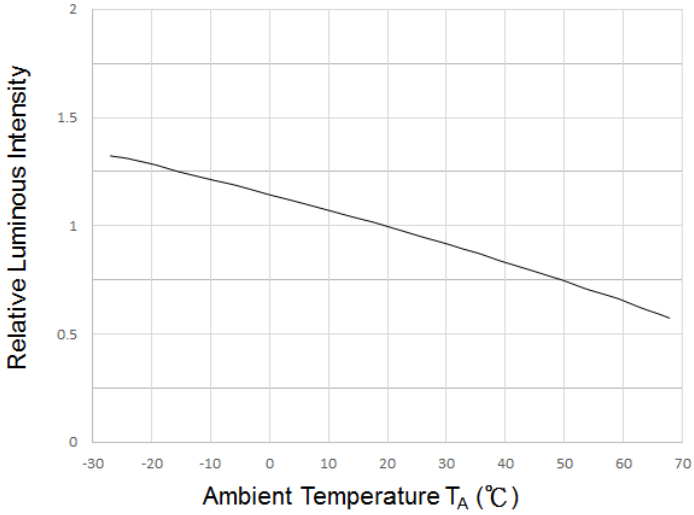

Typical Characteristic Curves – B, G, W

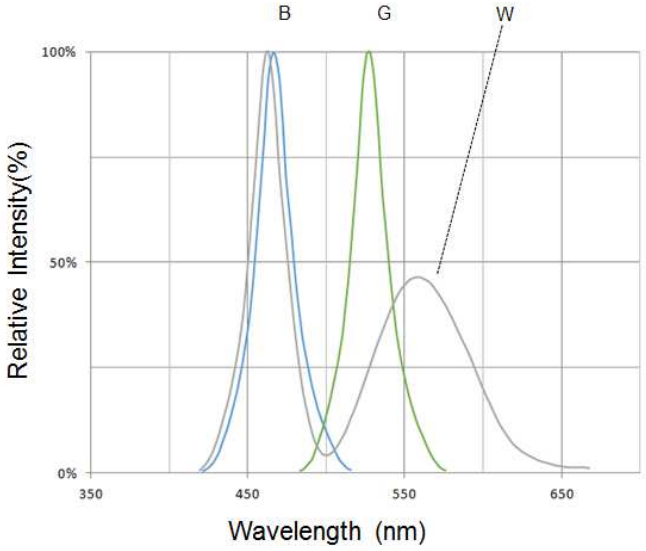

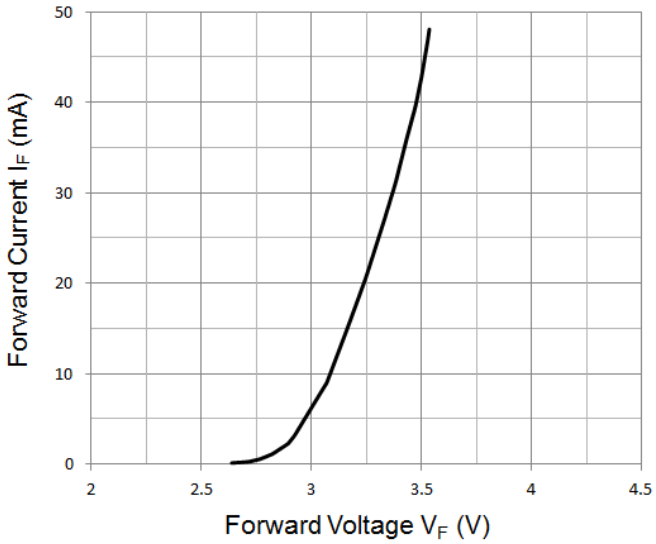

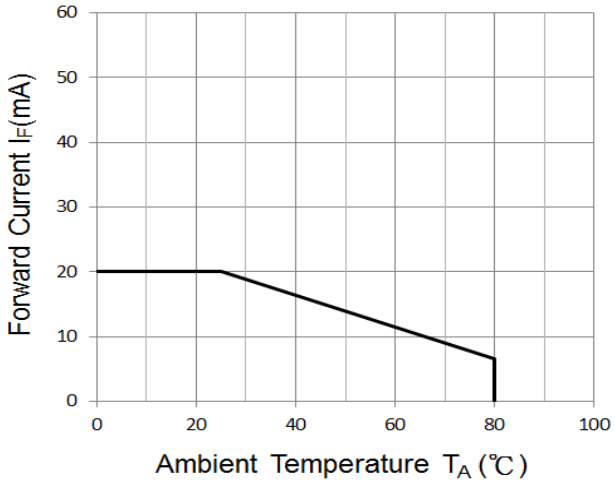

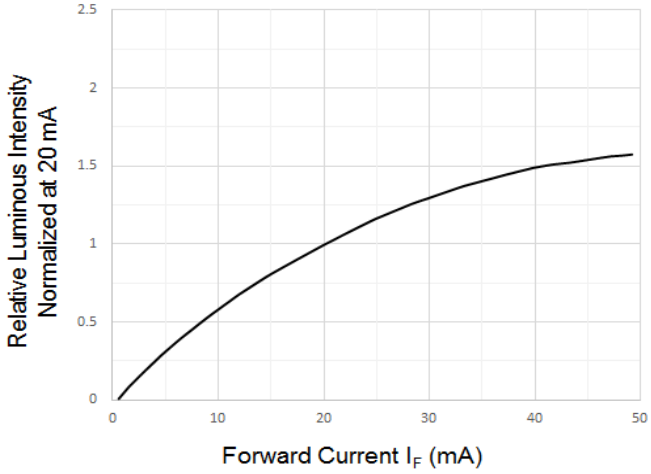

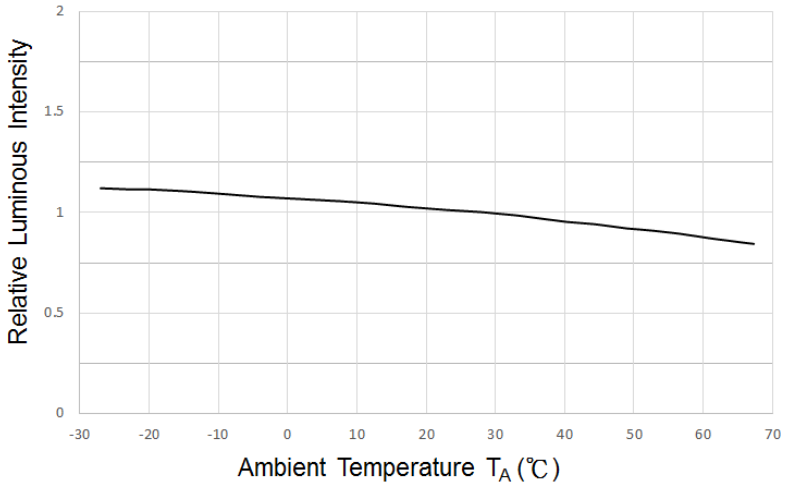

Typical Characteristic Curves – Radiation Pattern

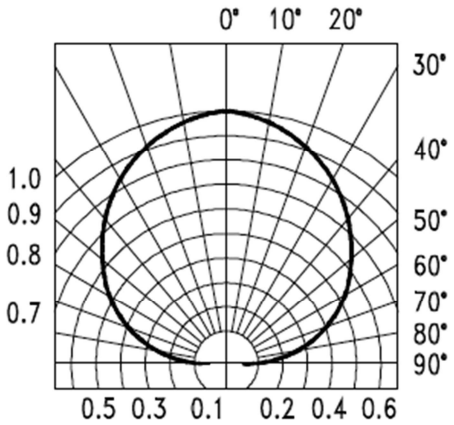

Ordering Information

Product	Emission Color	Technology	Test Current I_F (mA)	Luminous Intensity I_V (mcd) (Typ.)	Forward Voltage V_F (V) (Typ.)	Orderable Part Number
IN-S126ATYG	Yellow Green	AlInGaP	20	35	2.0	IN-S126ATYG
IN-S126ATY	Yellow	AlInGaP	20	120	2.0	IN-S126ATY
IN-S126ATA	Amber	AlInGaP	20	140	2.0	IN-S126ATA
IN-S126ATR	Red	AlInGaP	20	140	2.0	IN-S126ATR
IN-S126ATB	Blue	InGaN	20	140	3.2	IN-S126ATB
IN-S126ATG	Green	InGaN	20	560	3.2	IN-S126ATG
IN-S126AT5UW	White	InGaN	5	180	3.0	IN-S126AT5UW

Label Specifications

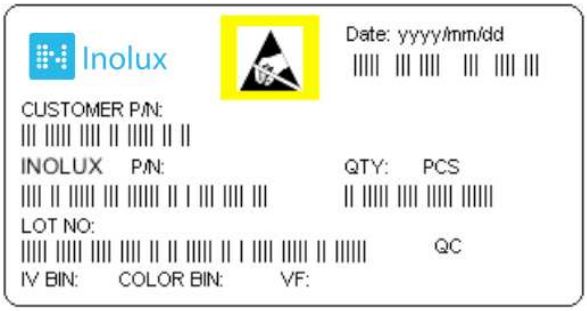

Inolux P/N:

I	N	-	S	1	2	6	A	T			X	-	X	X	X	X
Inolux SMD			Material	Package			Variation	Orientation	Current	Lens	Color		Customized Stamp-off			
			S = PCB Type	126A = 3.2 x 1.6 x 1.1mm				T = Top Mount	(Blank) = 20mA 5=5mA	(Blank) = Clear U = Diffused	R=630nm A=610nm Y=594nm YG=576nm G=526nm B=472nm W=White					

Lot No.:

Z	2	0	1	7	01	24	001
Internal Tracker	Year (2017, 2018, ...)				Month	Date	Serial

Packaging Information: 3000pcs Per Reel

Tape Dimension

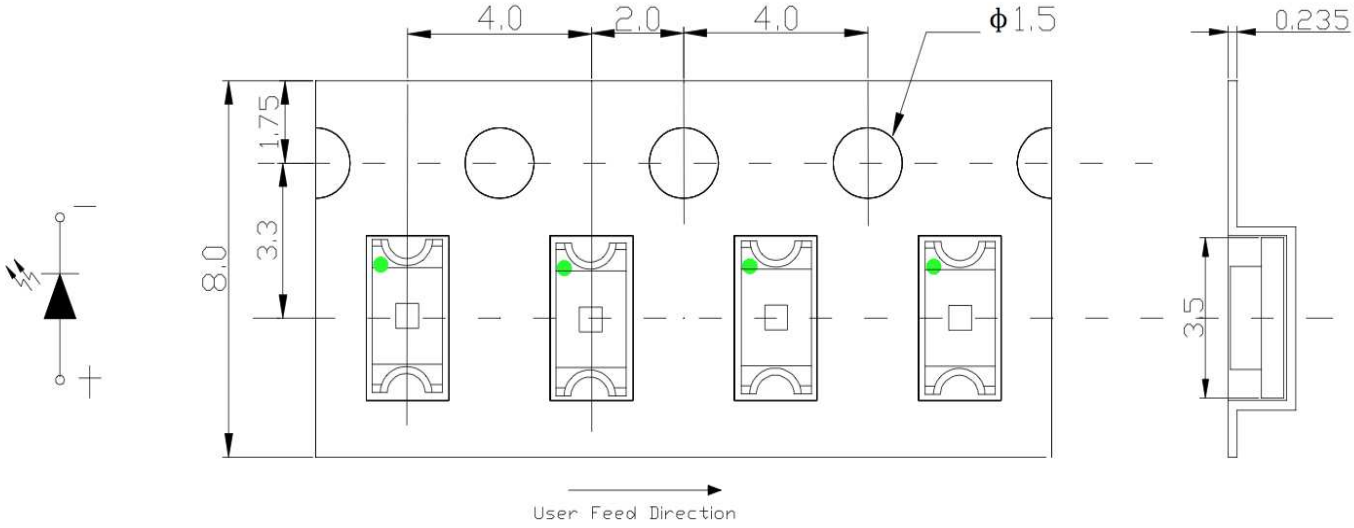

Reel Dimension

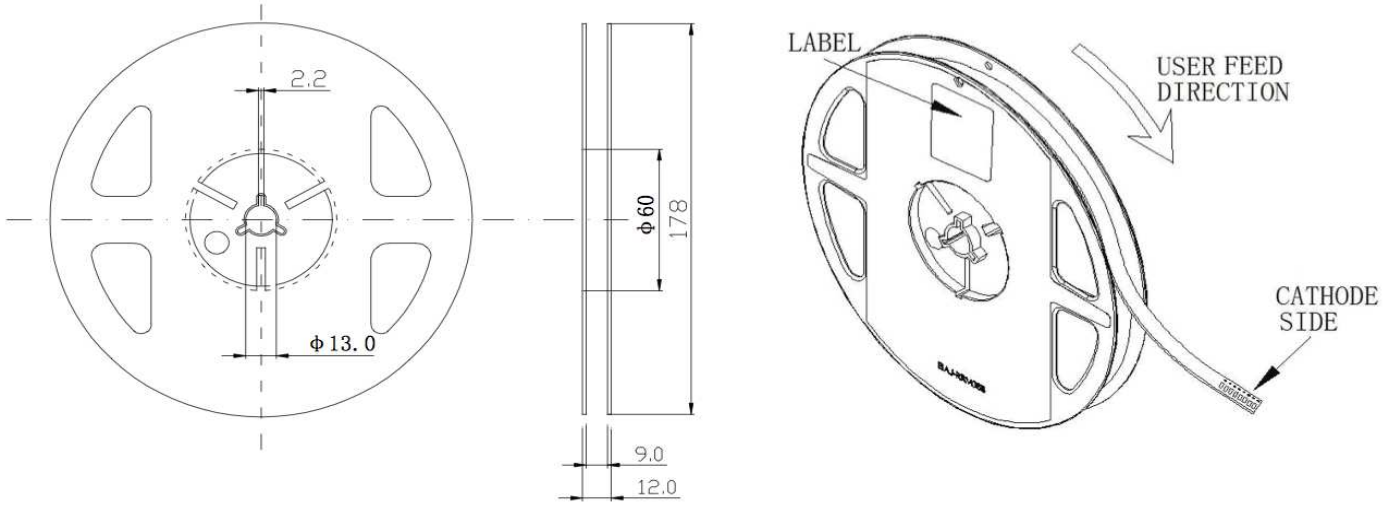

Packing Dimension

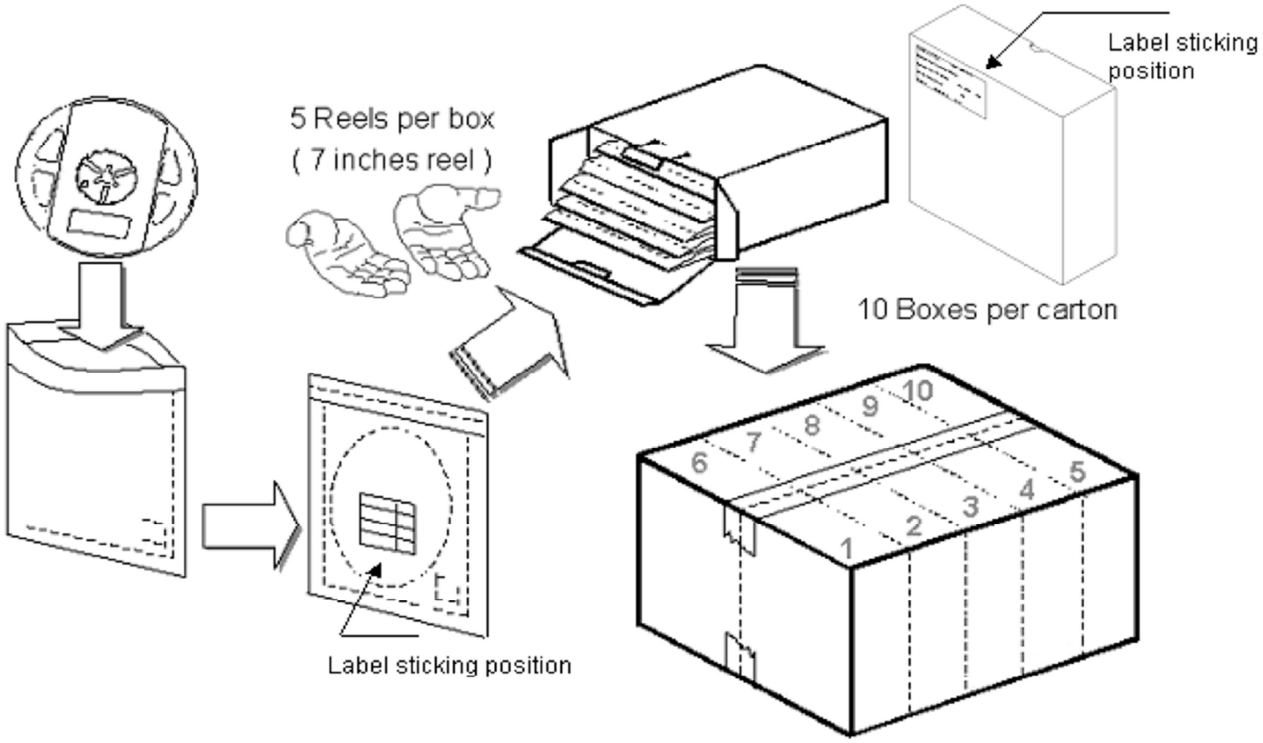

5 boxes per carton are available depending on shipment quantity.

	Specification	Material	Quantity
Carrier tape	Per EIA 481-1A specs	Conductive black tape	3000pcs per reel
Reel	Per EIA 481-1A specs	Conductive black	
Label	IN standard	Paper	
Packing bag	220x240mm	Aluminum laminated bag/ no-zipper	One reel per bag
Carton	IN standard	Paper	Non-specified
Others: Each immediate box consists of 5 reels. The 5 reels may not necessarily have the same lot number or the same bin combinations of Iv, λ_D and Vf. Each reel has a label identifying its specification; the immediate box consists of a product label as well.			

Dry Pack

All SMD optical devices are **MOISTURE SENSITIVE**. Avoid exposure to moisture at all times during transportation or storage. Every reel is packaged in a moisture protected anti-static bag. Each bag is properly sealed prior to shipment.

Upon request, a humidity indicator will be included in the moisture protected anti-static bag prior to shipment.

The packaging sequence is as follows:

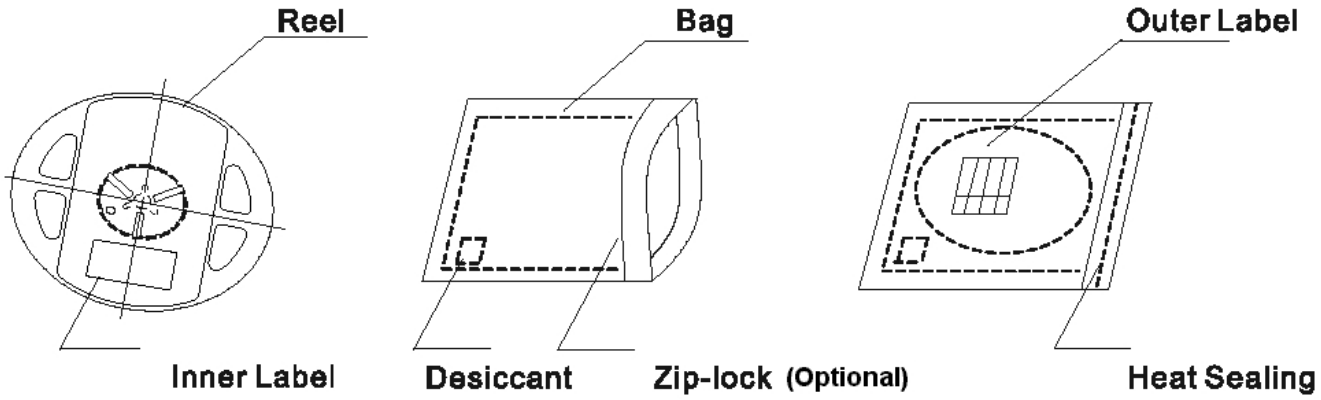

Reflow Soldering

- Recommended tin glue specifications: melting temperature in the range of 178~192 ^{O}C
- The recommended reflow soldering profile is as follows (temperatures indicated are as measured on the surface of the LED resin):

Lead-free Solder Profile

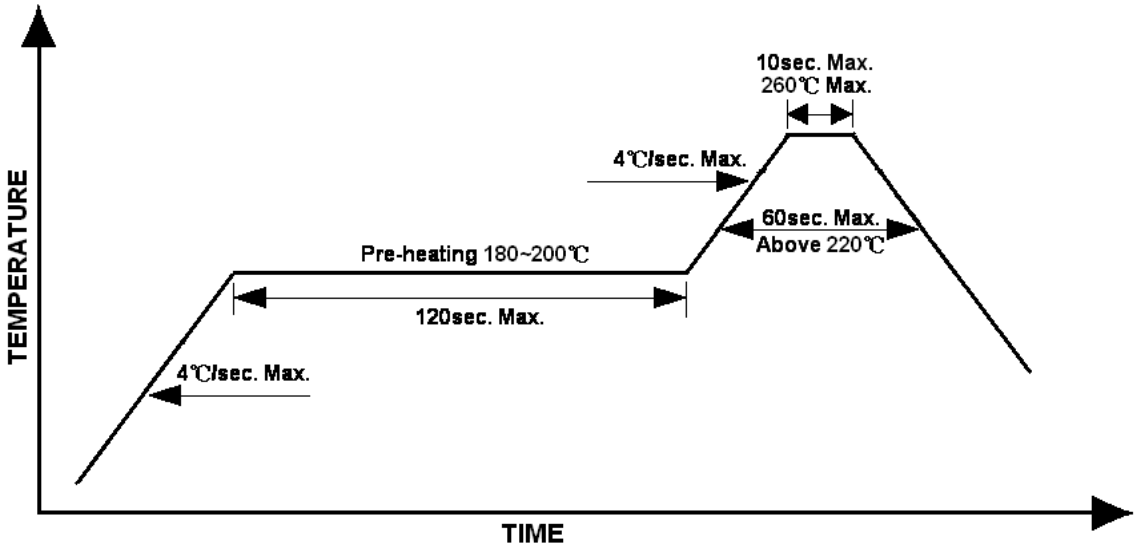

Precautions

- Avoid exposure to moisture at all times during transportation or storage.
- Anti-Static precaution must be taken when handling GaN, InGaN, and AlInGaP products.
- It is suggested to connect the unit with a current limiting resistor of the proper size. Avoid applying a reverse voltage.
- Avoid operation beyond the limits as specified by the absolute maximum ratings.
- Avoid direct contact with the surface through which the LED emits light.
- If possible, assemble the unit in a clean room or dust-free environment.

Reworking

- Rework should be completed within 5 seconds under 260 ^{O}C.
- The iron tip must not come in contact with the copper foil.
- Twin-head type is preferred.

Cleaning

Following are cleaning procedures after soldering:

- An alcohol-based solvent such as isopropyl alcohol (IPA) is recommended.
- Temperature x Time should be 50°C x 30sec. or <30°C x 3min
- Ultra sonic cleaning: < 15W/ bath; bath volume ≤ 1liter
- Curing: 100 ^{O}C max, <3min

Cautions of Pick and Place

- Avoid stress on the resin at elevated temperature.
- Avoid rubbing or scraping the resin by any object.
- Electro-static may cause damage to the component. Please ensure that the equipment is properly grounded. Use of an ionizer fan is recommended.

Reliability

Item	Frequency/ lots/ samples/ failures	Standards Reference	Conditions
Precondition	For all reliability monitoring tests according to JEDEC Level 2	J-STD-020	1.) Baking at 85℃ for 24hrs 2.) Moisture storage at 85℃/ 60% R.H. for 168hrs
Solderability	1Q/ 1/ 22/ 0	JESD22-B102-B And CNS-5068	Accelerated aging 155℃/ 24hrs Tinning speed: 2.5+0.5cm/s Tinning: A: 215℃/ 3+1s or B: 260℃/ 10+1s
Resistance to soldering heat		CNS-5067	Dipping soldering terminal only Soldering bath temperature A: 260+/-5℃; 10+/-1s B: 350+/-10℃; 3+/-0.5s
Operating life test	1Q/ 1/ 40/ 0	CNS-11829	1.) Precondition: 85℃ bakin g for 24hrs 85℃/ 60%R.H. for 168hrs 2.) Tamb25℃; IF=20mA; duration 1000hrs
High humidity, high temperature bias	1Q/ 1/ 45/ 0	JESD-A101-B	Tamb: 85℃ Humidity: 85% R.H., IF=5mA Duration: 1000hrs
High temperature bias	1Q/ 1/ 20	IN specs.	Tamb: 55℃ IF=20mA Duration: 1000hrs
Pulse life test	1Q/ 1/ 40/ 0		Tamb25℃, If=20mA,, Ip=100mA, Duty cycle=0.125 (tp=125 μs,T=1sec) Duration 500hrs)
Temperature cycle	1Q/ 1/ 76/ 0	JESD-A104-A IEC 68-2-14, Nb	A cycle: -40 degree C 15min; +85 degree C 15min Thermal steady within 5 min.. 300 cycles 2 chamber/ Air-to-air type
High humidity storage test	1Q/ 1/ 40/ 0	CNS-6117	60+3℃ 90+5/-10% R.H. for 500hrs
High temperature storage test	1Q/ 1/ 40/ 0	CNS-554	100+10℃ for 500hrs
Low temperature storage test	1Q/ 1/ 40/ 0	CNS-6118	-40+5℃ for 500hrs

Revision History

Changes since last revision	Page	Version No.	Revision Date
Initial Release		1.0	02-07-2017

DISCLAIMER

INOLUX reserves the right to make changes without further notice to any products herein to improve reliability, function or design. INOLUX does not assume any liability arising out of the application or use of any product or circuit described herein; neither does it convey any license under its patent rights, nor the rights of others.

LIFE SUPPORT POLICY

INOLUX's products are not authorized for use as critical components in life support devices or systems without the express written approval of the President of INOLUX or INOLUX CORPORATION. As used herein:
1. Life support devices or systems are devices or systems which, (a) are intended for surgical implant into the body, or (b) support or sustain life, and (c) whose failure to perform when properly used in accordance with instructions for use provided in the labeling, can be reasonably expected to result in a significant injury of the user.
2. A critical component in any component of a life support device or system whose failure to perform can be reasonably expected to cause the failure of the life support device or system, or to affect its safety or effectiveness.

Mouser Electronics

Authorized Distributor

Click to View Pricing, Inventory, Delivery & Lifecycle Information:

Inolux:

IN-S126ATYG IN-S126ATR IN-S126ATA IN-S126ATY IN-S126ATB IN-S126AT5UW IN-S126ATG