ESY, +105°C

Overview

The KEMET ESY radial aluminum electrolytic capacitors are designed for long life (up to 5,000 hours), very low impedance, and high ripple current applications.

Applications

Typical applications include audio/visual (AV), computer, communications, and switch mode power supplies (SMPS).

Benefits

- Very low impedance
- High ripple current
- Operating temperature of up to +105°C
- 1,000 – 5,000 hour operating life
- Case with Ø D ≥ 4 mm
- Safety vent on the capacitor base

Click image above for interactive 3D content

Open PDF in Adobe Reader for full functionality

Part Number System

ESY	396	M	6R3		A	B2	AA
Series	Capacitance Code (pF)	Tolerance	Rated Voltage (VDC)		Electrical Parameters	Size Code	Packaging
Radial Aluminum Electrolytic	First two digits represent significant figures for capacitance values. Last digit specifies the number of zeros to be added.	M = ±20%	6R3 = 6.3 010 = 10 016 = 16 025 = 25	035 = 35 050 = 50 063 = 63 100 = 100	A = Standard	See Dimension Table	See Ordering Options Table

© KEMET Electronics Corporation • KEMET Tower • One East Broward Boulevard
Fort Lauderdale, FL 33301 USA • 954-766-2800 • www.kemet.com

Ordering Options Table

Diameter	Length	Packaging Type	Lead Type	Lead Length (mm)	Lead and Packaging Code
Standard Bulk Packaging Options					
4 – 22	All	Bulk (bag)	Straight	20/15 Minimum	AA
Tape & Reel					
4 – 5	All	Tape & Reel	Formed to 2.5 mm	H_0 = 16 ±0.75	LA
4 – 8	All	Tape & Reel	2.5 mm lead spacing	H_0 = 18.5 ±0.75	KA
4 – 8	All	Tape & Reel	Formed to 5 mm	H_0 = 16 ±0.75	JA
10	≤ 20	Tape & Reel	Straight	H_0 = 18.5 ±0.75	KA
Ammo Pack					
4 – 8	All	Ammo	Formed to 5 mm	H_0 = 16 ±0.75	DA
4 – 8	All	Ammo	Straight	H_0 = 18.5 ±0.75	EA
4 – 5	All	Ammo	Formed to 2.5 mm	H_0 = 16 ±0.75	FA
10 – 13	All	Ammo	5 mm lead spacing	H_0 = 18.5 ±0.75	EA
16	All	Ammo	7.5 mm lead spacing	H_0 = 18.5 ±0.75	EA
18	≤ 25	Ammo	7.5 mm lead spacing	H_0 = 18.5 ±0.75	EA
Contact KEMET for other lead and packaging options					

Environmental Compliance

As an environmentally conscious company, KEMET is working continuously with improvements concerning the environmental effects of both our capacitors and their production. In Europe (RoHS Directive) and in some other geographical areas like China, legislation has been put in place to prevent the use of some hazardous materials, such as lead (Pb), in electronic equipment. All products in this catalog are produced to help our customers' obligations to guarantee their products and fulfill these legislative requirements. The only material of concern in our products has been lead (Pb), which has been removed from all designs to fulfill the requirement of containing less than 0.1% of lead in any homogeneous material. KEMET will closely follow any changes in legislation world wide and make any necessary changes in its products, whenever needed.

Some customer segments such as medical, military and automotive electronics may still require the use of lead in electrode coatings. To clarify the situation and distinguish products from each other, a special symbol is used on the packaging labels for RoHS compatible capacitors.

Due to customer requirements, there may appear additional markings such as lead free (LF) or lead-free wires (LFW) on the label.

Dimensions – Millimeters

SIDE VIEW

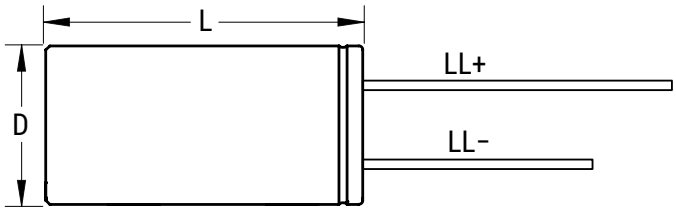

TERMINAL END VIEW

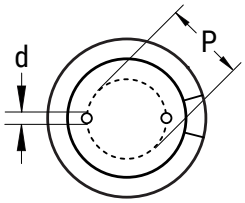

Size Code	D		L		P		d		LL+/LL–
	Nominal	Tolerance	Nominal	Tolerance	Nominal	Tolerance	Nominal	Tolerance	Minimum
B2	4.0	±0.5	7.0	+1.5/–0	1.5	±0.5	0.45	Nominal	20/15
C2	5.0	±0.5	7.0	+1.5/–0	2.0	±0.5	0.45	Nominal	20/15
C3	5.0	±0.5	11.0	+1.5/–0	2.0	±0.5	0.50	Nominal	20/15
E2	6.3	±0.5	7.0	+1.5/–0	2.5	±0.5	0.45	Nominal	20/15
E3	6.3	±0.5	11.0	+1.5/–0	2.5	±0.5	0.50	Nominal	20/15
G1	8.0	±0.5	7.0	+1.5/–0	3.5	±0.5	0.50	Nominal	20/15
G3	8.0	±0.5	11.0	+1.5/–0	3.5	±0.5	0.60	Nominal	20/15
G4	8.0	±0.5	15.0	+2.0/–0	3.5	±0.5	0.60	Nominal	20/15
G8	8.0	±0.5	16.0	+2.0/–0	3.5	±0.5	0.60	Nominal	20/15
G6	8.0	±0.5	20.0	+2.0/–0	3.5	±0.5	0.60	Nominal	20/15
H9	10.0	±0.5	12.5	+1.5/–0	5.0	±0.5	0.60	Nominal	20/15
H8	10.0	±0.5	16.0	+2.0/–0	5.0	±0.5	0.60	Nominal	20/15
H4	10.0	±0.5	20.0	+2.0/–0	5.0	±0.5	0.60	Nominal	20/15
H5	10.0	±0.5	25.0	+2.0/–0	5.0	±0.5	0.60	Nominal	20/15
L2	13.0	±0.5	16.0	+2.0/–0	5.0	±0.5	0.60	Nominal	20/15
L3	13.0	±0.5	20.0	+2.0/–0	5.0	±0.5	0.60	Nominal	20/15
L4	13.0	±0.5	25.0	+2.0/–0	5.0	±0.5	0.60	Nominal	20/15
L8	13.0	±0.5	30.0	+2.0/–0	5.0	±0.5	0.60	Nominal	20/15
L6	13.0	±0.5	35.0	+2.0/–0	5.0	±0.5	0.60	Nominal	20/15
L7	13.0	±0.5	40.0	+2.0/–0	5.0	±0.5	0.60	Nominal	20/15
M5	16.0	±0.5	20.0	+2.0/–0	7.5	±0.5	0.80	Nominal	20/15
M7	16.0	±0.5	25.0	+2.0/–0	7.5	±0.5	0.80	Nominal	20/15
M2	16.0	±0.5	32.0	+2.0/–0	7.5	±0.5	0.80	Nominal	20/15
M3	16.0	±0.5	36.0	+2.0/–0	7.5	±0.5	0.80	Nominal	20/15
M4	16.0	±0.5	40.0	+2.0/–0	7.5	±0.5	0.80	Nominal	20/15
N4	18.0	±0.5	20.0	+2.0/–0	7.5	±0.5	0.80	Nominal	20/15
N5	18.0	±0.5	25.0	+2.0/–0	7.5	±0.5	0.80	Nominal	20/15
N1	18.0	±0.5	32.0	+2.0/–0	7.5	±0.5	0.80	Nominal	20/15
N2	18.0	±0.5	36.0	+2.0/–0	7.5	±0.5	0.80	Nominal	20/15
N3	18.0	±0.5	40.0	+2.0/–0	7.5	±0.5	0.80	Nominal	20/15

Performance Characteristics

Item	Performance Characteristics
Capacitance Range	5.6 – 6800 µF
Capacitance Tolerance	±20% at 120 Hz/20°C
Rated Voltage	6.3 – 100 VDC
Life Test	1,000 – 5,000 hours (see conditions in Test Method & Performance)
Operating Temperature	−40°C to +105°C
Leakage Current	I ≤ 0.01 CV or 3 µA, whichever is greater
	C = rated capacitance (µF), V = rated voltage (VDC). Voltage applied for 2 minutes at 20°C.

Impedance Z Characteristics at 120 Hz

Rated Voltage (VDC)	6.3	10	16	25	35	50	63	100
Z (−25°C)/Z (20°C)	2	2	2	2	2	2	2	2
Z (−40°C)/Z (20°C)	3	3	3	3	3	3	3	3

Compensation Factor of Ripple Current (RC) vs. Frequency

Capacitance Range (µF)	50 Hz	120 Hz	1 kHz	10 kHz	100 kHz
5.6 – 390	0.60	0.70	0.85	0.95	1.00
470 – 1,000	0.65	0.75	0.90	0.98	1.00
1,200 – 6,800	0.75	0.80	0.95	1.00	1.00

Test Method & Performance

Conditions	Load Life Test			Shelf Life Test
Temperature	105°C			105°C
Test Duration	Can Ø ≤ 8.0 mm	L = 7	1,000 hours	500 hours
	Can Ø ≤ 6.3 mm	L ≥ 11	2,000 hours	1,000 hours
	Can Ø = 8.0 mm	L ≥ 11	3,000 hours	
	Can Ø = 10.0 mm	L ≥ 11	4,000 hours	
	Can Ø ≥ 13.0 mm	L ≥ 11	5,000 hours	
	If dimension is down size, endurance will be 1,000 hours less than standard			
Ripple Current	Maximum ripple current specified at 100 kHz 105°C			No ripple current applied
Voltage	The sum of DC voltage and the peak AC voltage must not exceed the rated voltage of the capacitor			No voltage applied
Performance	**The following specifications will be satisfied when the capacitor is restored to 20°C:**			
Capacitance Change	Within ±25% of the initial value			
Dissipation Factor	Does not exceed 200% of the specified value			
Leakage Current	Does not exceed specified value			

Shelf Life

The capacitance, ESR and impedance of a capacitor will not change significantly after extended storage periods, however, the leakage current will very slowly increase.

KEMET's E aluminum electrolytic capacitors should not be stored in high temperatures or where there is a high level of humidity. The suitable storage condition for KEMET's E aluminum electrolytic capacitors is +5 to +35°C and less than 75% in relative humidity. KEMET's E aluminum electrolytic capacitors should not be stored in damp conditions such as water, saltwater spray or oil spray. KEMET's E aluminum electrolytic capacitors should not be stored in an environment full of hazardous gas (hydrogen sulphide, sulphurous acid gas, nitrous acid, chlorine gas, ammonium, etc.) KEMET's E aluminum electrolytic capacitors should not be stored under exposure to ozone, ultraviolet rays or radiation.

If a capacitor has been stored for more than 18 months under these conditions and it shows increased leakage current, then a treatment by voltage application is recommended.

Re-Age (Reforming) Procedure

Apply the rated voltage to the capacitor at room temperature for a period of one hour, or until the leakage current has fallen to a steady value below the specified limit. During re-aging a maximum charging current of twice the specified leakage current or 5 mA, whichever is greater, is suggested.

Table 1 – Ratings & Part Number Reference

VDC	VDC Surge Voltage	Rated Capacitance 120 Hz 20°C (µF)	Case Size D x L (mm)	DF 120 Hz 20°C (tan δ %)*	Z 100 kHZ 20°C (Ω)	RC 100 kHz 105°C (mA)	LC 20°C 2 Minutes (µA)	Part Number
6.3	8	39	4 x 7	22	0.850	130	3.0	ESY396M6R3AB2(1)
6.3	8	47	5 x 7	22	0.700	175	3.0	ESY476M6R3AC2(1)
6.3	8	56	5 x 7	22	0.560	190	3.5	ESY566M6R3AC2(1)
6.3	8	68	5 x 7	22	0.430	210	4.3	ESY686M6R3AC2(1)
6.3	8	100	5 x 11	22	0.430	200	6.3	ESY107M6R3AC3(1)
6.3	8	100	6.3 x 7	22	0.350	240	6.3	ESY107M6R3AE2(1)
6.3	8	120	5 x 11	22	0.380	220	7.6	ESY127M6R3AC3(1)
6.3	8	120	6.3 x 7	22	0.290	270	7.6	ESY127M6R3AE2(1)
6.3	8	150	5 x 11	22	0.300	250	9.5	ESY157M6R3AC3(1)
6.3	8	150	6.3 x 7	22	0.230	300	9.5	ESY157M6R3AE2(1)
6.3	8	180	8 x 7	22	0.180	340	11.3	ESY187M6R3AG1(1)
6.3	8	220	8 x 7	22	0.150	380	13.9	ESY227M6R3AG1(1)
6.3	8	270	6.3 x 11	22	0.160	370	17.0	ESY277M6R3AE3(1)
6.3	8	330	6.3 x 11	22	0.130	410	20.8	ESY337M6R3AE3(1)
6.3	8	470	8 x 11	22	0.086	680	29.6	ESY477M6R3AG3(1)
6.3	8	560	8 x 11	22	0.072	760	35.3	ESY567M6R3AG3(1)
6.3	8	680	8 x 15	22	0.062	900	42.8	ESY687M6R3AG4(1)
6.3	8	820	8 x 15	22	0.056	1000	51.7	ESY827M6R3AG4(1)
6.3	8	1000	10 x 12.5	22	0.053	1030	63.0	ESY108M6R3AH9(1)
6.3	8	1200	8 x 20	22	0.041	1250	75.6	ESY128M6R3AG6(1)
6.3	8	1200	10 x 16	22	0.038	1430	75.6	ESY128M6R3AH8(1)
6.3	8	1500	10 x 20	22	0.026	1820	94.5	ESY158M6R3AH4(1)
6.3	8	1800	10 x 25	22	0.025	1940	113.4	ESY188M6R3AH5(1)
6.3	8	2200	10 x 25	22	0.023	2150	138.6	ESY228M6R3AH5(1)
6.3	8	2700	13 x 20	22	0.022	2230	170.1	ESY278M6R3AL3(1)
6.3	8	3300	13 x 20	22	0.021	2360	207.9	ESY338M6R3AL3(1)
6.3	8	3900	13 x 25	22	0.018	2770	245.7	ESY398M6R3AL4(1)
6.3	8	4700	13 x 30	22	0.016	3290	296.1	ESY478M6R3AL8(1)
6.3	8	5600	13 x 35	22	0.015	3400	352.8	ESY568M6R3AL6(1)
6.3	8	5600	16 x 20	22	0.018	3140	352.8	ESY568M6R3AM5(1)
6.3	8	6800	16 x 25	22	0.016	3460	428.4	ESY688M6R3AM7(1)
10	13	27	4 x 7	19	0.890	130	3.0	ESY276M010AB2(1)
10	13	33	5 x 7	19	0.750	160	3.3	ESY336M010AC2(1)
10	13	39	5 x 7	19	0.640	175	3.9	ESY396M010AC2(1)
10	13	47	5 x 7	19	0.530	190	4.7	ESY476M010AC2(1)
10	13	56	5 x 7	19	0.440	210	5.6	ESY566M010AC2(1)
10	13	68	5 x 11	19	0.440	210	6.8	ESY686M010AC3(1)
10	13	100	5 x 11	19	0.300	250	10.0	ESY107M010AC3(1)
10	13	120	6.3 x 7	19	0.230	300	12.0	ESY127M010AE2(1)
10	13	150	8 x 7	19	0.180	345	15.0	ESY157M010AG1(1)
10	13	180	8 x 7	19	0.150	380	18.0	ESY187M010AG1(1)
10	13	220	6.3 x 11	19	0.130	410	22.0	ESY227M010AE3(1)
10	13	270	8 x 11	19	0.120	580	27.0	ESY277M010AG3(1)
10	13	330	8 x 11	19	0.100	640	33.0	ESY337M010AG3(1)
10	13	470	8 x 11	19	0.072	760	47.0	ESY477M010AG3(1)
10	13	560	8 x 15	19	0.068	910	56.0	ESY567M010AG4(1)
10	13	560	10 x 12.5	19	0.064	940	56.0	ESY567M010AH9(1)
10	13	680	8 x 16	19	0.056	1000	68.0	ESY687M010AG8(1)
10	13	680	10 x 12.5	19	0.053	1030	68.0	ESY687M010AH9(1)
10	13	820	8 x 20	19	0.050	1130	82.0	ESY827M010AG6(1)
10	13	820	10 x 16	19	0.046	1300	82.0	ESY827M010AH8(1)
10	13	1000	8 x 20	19	0.041	1250	100.0	ESY108M010AG6(1)
10	13	1000	10 x 16	19	0.038	1430	100.0	ESY108M010AH8(1)
10	13	1200	10 x 20	19	0.026	1820	120.0	ESY128M010AH4(1)
10	13	1500	10 x 25	19	0.023	2150	150.0	ESY158M010AH5(1)
10	13	1800	13 x 20	19	0.022	2230	180.0	ESY188M010AL3(1)
10	13	2200	13 x 20	19	0.021	2360	220.0	ESY228M010AL3(1)
VDC	**VDC Surge**	**Rated Capacitance**	**Case Size**	**DF**	**Z**	**RC**	**LC**	**Part Number**

(1) Insert packaging code. See Ordering Options Table for available options.

** When capacitance exceeds 1,000 µF, the DF value (%) is increased by 2% for every additional 1,000 µF.*

Table 1 – Ratings & Part Number Reference cont.

VDC	VDC Surge Voltage	Rated Capacitance 120 Hz 20°C (µF)	Case Size D x L (mm)	DF 120 Hz 20°C (tan δ %)*	Z 100 kHZ 20°C (Ω)	RC 100 kHz 105°C (mA)	LC 20°C 2 Minutes (µA)	Part Number
10	13	2700	13 x 25	19	0.020	2510	270.0	ESY278M010AL4(1)
10	13	3300	13 x 25	19	0.018	2770	330.0	ESY338M010AL4(1)
10	13	3900	13 x 30	19	0.016	3290	390.0	ESY398M010AL8(1)
10	13	3900	16 x 20	19	0.018	3140	390.0	ESY398M010AM5(1)
10	13	4700	13 x 35	19	0.015	3400	470.0	ESY478M010AL6(1)
10	13	5600	16 x 25	19	0.016	3460	560.0	ESY568M010AM7(1)
16	20	18	4 x 7	16	0.920	130	3.0	ESY186M016AB2(1)
16	20	27	5 x 7	16	0.610	190	4.3	ESY276M016AC2(1)
16	20	33	5 x 7	16	0.450	210	5.3	ESY336M016AC2(1)
16	20	39	5 x 11	16	0.430	220	6.2	ESY396M016AC3(1)
16	20	47	5 x 11	16	0.360	230	7.5	ESY476M016AC3(1)
16	20	56	5 x 11	16	0.300	250	9.0	ESY566M016AC3(1)
16	20	68	6.3 x 7	16	0.240	300	10.9	ESY686M016AE2(1)
16	20	100	6.3 x 11	16	0.160	370	16.0	ESY107M016AE3(1)
16	20	100	8 x 7	16	0.180	350	16.0	ESY107M016AG1(1)
16	20	120	6.3 x 11	16	0.130	410	19.2	ESY127M016AE3(1)
16	20	120	8 x 7	16	0.150	380	19.2	ESY127M016AG1(1)
16	20	150	8 x 11	16	0.120	510	24.0	ESY157M016AG3(1)
16	20	180	8 x 11	16	0.110	560	28.8	ESY187M016AG3(1)
16	20	220	8 x 11	16	0.100	620	35.2	ESY227M016AG3(1)
16	20	270	8 x 11	16	0.088	690	43.2	ESY277M016AG3(1)
16	20	330	8 x 11	16	0.072	760	52.8	ESY337M016AG3(1)
16	20	470	8 x 16	16	0.056	1000	75.2	ESY477M016AG8(1)
16	20	470	10 x 12.5	16	0.053	1030	75.2	ESY477M016AH9(1)
16	20	560	8 x 20	16	0.049	1140	89.6	ESY567M016AG6(1)
16	20	560	10 x 16	16	0.046	1300	89.6	ESY567M016AH8(1)
16	20	680	8 x 20	16	0.041	1250	108.8	ESY687M016AG6(1)
16	20	680	10 x 16	16	0.038	1430	108.8	ESY687M016AH8(1)
16	20	820	10 x 20	16	0.032	1650	131.2	ESY827M016AH4(1)
16	20	1000	10 x 20	16	0.026	1820	160.0	ESY108M016AH4(1)
16	20	1200	10 x 25	16	0.023	2150	192.0	ESY128M016AH5(1)
16	20	1500	13 x 20	16	0.021	2360	240.0	ESY158M016AL3(1)
16	20	1800	13 x 25	16	0.020	2510	288.0	ESY188M016AL4(1)
16	20	2200	13 x 25	16	0.018	2770	352.0	ESY228M016AL4(1)
16	20	2700	13 x 30	16	0.016	3290	432.0	ESY278M016AL8(1)
16	20	2700	16 x 20	16	0.018	3140	432.0	ESY278M016AM5(1)
16	20	3300	13 x 35	16	0.015	3400	528.0	ESY338M016AL6(1)
16	20	3900	16 x 25	16	0.016	3460	624.0	ESY398M016AM7(1)
25	32	15	4 x 7	14	0.940	130	3.8	ESY156M025AB2(1)
25	32	18	5 x 7	14	0.690	170	4.5	ESY186M025AC2(1)
25	32	27	5 x 7	14	0.460	210	6.8	ESY276M025AC2(1)
25	32	33	5 x 11	14	0.420	220	8.3	ESY336M025AC3(1)
25	32	39	5 x 11	14	0.360	230	9.8	ESY396M025AC3(1)
25	32	47	5 x 11	14	0.300	250	11.8	ESY476M025AC3(1)
25	32	56	6.3 x 7	14	0.240	300	14.0	ESY566M025AE2(1)
25	32	68	6.3 x 11	14	0.190	340	17.0	ESY686M025AE3(1)
25	32	68	8 x 7	14	0.220	310	17.0	ESY686M025AG1(1)
25	32	100	6.3 x 11	14	0.130	410	25.0	ESY107M025AE3(1)
25	32	100	8 x 7	14	0.150	380	25.0	ESY107M025AG1(1)
25	32	120	8 x 11	14	0.120	560	30.0	ESY127M025AG3(1)
25	32	150	8 x 11	14	0.105	630	37.5	ESY157M025AG3(1)
25	32	180	8 x 11	14	0.088	690	45.0	ESY187M025AG3(1)
25	32	220	8 x 11	14	0.072	760	55.0	ESY227M025AG3(1)
25	32	270	8 x 15	14	0.068	900	67.5	ESY277M025AG4(1)
25	32	270	10 x 12.5	14	0.065	930	67.5	ESY277M025AH9(1)
25	32	330	10 x 12.5	14	0.053	1030	82.5	ESY337M025AH9(1)
25	32	330	8 x 16	14	0.056	1000	82.5	ESY337M025AG8(1)
VDC	**VDC Surge**	**Rated Capacitance**	**Case Size**	**DF**	**Z**	**RC**	**LC**	**Part Number**

(1) Insert packaging code. See Ordering Options Table for available options.

** When capacitance exceeds 1,000 µF, the DF value (%) is increased by 2% for every additional 1,000 µF.*

Table 1 – Ratings & Part Number Reference cont.

VDC	VDC Surge Voltage	Rated Capacitance 120 Hz 20°C (µF)	Case Size D x L (mm)	DF 120 Hz 20°C (tan δ %)*	Z 100 kHZ 20°C (Ω)	RC 100 kHz 105°C (mA)	LC 20°C 2 Minutes (µA)	Part Number
25	32	470	8 x 20	14	0.041	1250	117.5	ESY477M025AG6(1)
25	32	470	10 x 16	14	0.038	1430	117.5	ESY477M025AH8(1)
25	32	560	10 x 20	14	0.032	1650	140.0	ESY567M025AH4(1)
25	32	680	10 x 20	14	0.026	1820	170.0	ESY687M025AH4(1)
25	32	820	10 x 25	14	0.023	2150	205.0	ESY827M025AH5(1)
25	32	1000	13 x 20	14	0.021	2360	250.0	ESY108M025AL3(1)
25	32	1200	13 x 25	14	0.020	2510	300.0	ESY128M025AL4(1)
25	32	1500	13 x 25	14	0.018	2770	375.0	ESY158M025AL4(1)
25	32	1800	13 x 30	14	0.016	3290	450.0	ESY188M025AL8(1)
25	32	1800	16 x 20	14	0.018	3140	450.0	ESY188M025AM5(1)
25	32	2200	13 x 35	14	0.015	3400	550.0	ESY228M025AL6(1)
25	32	2700	16 x 25	14	0.016	3460	675.0	ESY278M025AM7(1)
35	44	10	4 x 7	12	0.960	130	3.5	ESY106M035AB2(1)
35	44	15	5 x 7	12	0.570	190	5.3	ESY156M035AC2(1)
35	44	18	5 x 7	12	0.470	210	6.3	ESY186M035AC2(1)
35	44	27	5 x 11	12	0.370	230	9.5	ESY276M035AC3(1)
35	44	33	5 x 11	12	0.300	250	11.6	ESY336M035AC3(1)
35	44	39	6.3 x 7	12	0.250	300	13.7	ESY396M035AE2(1)
35	44	47	6.3 x 11	12	0.150	380	16.5	ESY476M035AE3(1)
35	44	47	8 x 7	12	0.190	350	16.5	ESY476M035AG1(1)
35	44	56	6.3 x 11	12	0.130	410	19.6	ESY566M035AE3(1)
35	44	56	8 x 7	12	0.160	380	19.6	ESY566M035AG1(1)
35	44	68	8 x 11	12	0.120	510	23.8	ESY686M035AG3(1)
35	44	100	8 x 11	12	0.105	620	35.0	ESY107M035AG3(1)
35	44	120	8 x 11	12	0.088	680	42.0	ESY127M035AG3(1)
35	44	150	8 x 11	12	0.072	760	52.5	ESY157M035AG3(1)
35	44	180	8 x 15	12	0.068	910	63.0	ESY187M035AG4(1)
35	44	180	10 x 12.5	12	0.065	930	63.0	ESY187M035AH9(1)
35	44	220	10 x 12.5	12	0.053	1030	77.0	ESY227M035AH9(1)
35	44	220	8 x 16	12	0.056	1000	77.0	ESY227M035AG8(1)
35	44	270	8 x 20	12	0.041	1250	94.5	ESY277M035AG6(1)
35	44	330	10 x 16	12	0.038	1430	115.5	ESY337M035AH8(1)
35	44	470	10 x 20	12	0.026	1820	164.5	ESY477M035AH4(1)
35	44	560	10 x 25	12	0.023	2150	196.0	ESY567M035AH5(1)
35	44	680	13 x 20	12	0.021	2360	238.0	ESY687M035AL3(1)
35	44	820	13 x 25	12	0.020	2510	287.0	ESY827M035AL4(1)
35	44	1000	13 x 25	12	0.018	2770	350.0	ESY108M035AL4(1)
35	44	1200	13 x 30	12	0.016	3290	420.0	ESY128M035AL8(1)
35	44	1200	16 x 20	12	0.018	3140	420.0	ESY128M035AM5(1)
35	44	1500	13 x 35	12	0.015	3400	525.0	ESY158M035AL6(1)
35	44	1800	16 x 25	12	0.016	3460	630.0	ESY188M035AM7(1)
50	63	5.6	4 x 7	10	1.000	130	3.0	ESY565M050AB2(1)
50	63	6.8	5 x 7	10	0.740	170	3.4	ESY685M050AC2(1)
50	63	10	5 x 7	10	0.500	210	5.0	ESY106M050AC2(1)
50	63	15	5 x 11	10	0.480	215	7.5	ESY156M050AC3(1)
50	63	15	6.3 x 7	10	0.380	220	7.5	ESY156M050AE2(1)
50	63	22	5 x 11	10	0.340	240	11.0	ESY226M050AC3(1)
50	63	22	6.3 x 7	10	0.260	300	11.0	ESY226M050AE2(1)
50	63	27	8 x 7	10	0.210	340	13.5	ESY276M050AG1(1)
50	63	33	8 x 7	10	0.170	380	16.5	ESY336M050AG1(1)
50	63	39	6.3 x 11	10	0.160	330	19.5	ESY396M050AE3(1)
50	63	47	6.3 x 11	10	0.150	360	23.5	ESY476M050AE3(1)
50	63	56	6.3 x 11	10	0.140	390	28.0	ESY566M050AE3(1)
50	63	68	8 x 11	10	0.110	600	34.0	ESY686M050AG3(1)
50	63	82	8 x 11	10	0.090	660	41.0	ESY826M050AG3(1)
50	63	100	8 x 11	10	0.074	730	50.0	ESY107M050AG3(1)
50	63	120	8 x 15	10	0.065	950	60.0	ESY127M050AG4(1)
VDC	**VDC Surge**	**Rated Capacitance**	**Case Size**	**DF**	**Z**	**RC**	**LC**	**Part Number**

(1) Insert packaging code. See Ordering Options Table for available options.

** When capacitance exceeds 1,000 µF, the DF value (%) is increased by 2% for every additional 1,000 µF.*

Table 1 – Ratings & Part Number Reference cont.

VDC	VDC Surge Voltage	Rated Capacitance 120 Hz 20°C (µF)	Case Size D x L (mm)	DF 120 Hz 20°C (tan δ %)*	Z 100 kHZ 20°C (Ω)	RC 100 kHz 105°C (mA)	LC 20°C 2 Minutes (µA)	Part Number
50	63	150	10 x 12.5	10	0.061	980	75.0	ESY157M050AH9(1)
50	63	180	8 x 20	10	0.046	1190	90.0	ESY187M050AG6(1)
50	63	220	10 x 16	10	0.042	1370	110.0	ESY227M050AH8(1)
50	63	270	10 x 20	10	0.030	1580	135.0	ESY277M050AH4(1)
50	63	330	10 x 25	10	0.028	1870	165.0	ESY337M050AH5(1)
50	63	390	13 x 20	10	0.028	1870	195.0	ESY397M050AL3(1)
50	63	470	13 x 20	10	0.027	2050	235.0	ESY477M050AL3(1)
50	63	560	13 x 25	10	0.023	2410	280.0	ESY567M050AL4(1)
50	63	680	13 x 30	10	0.021	2860	340.0	ESY687M050AL8(1)
50	63	820	13 x 35	10	0.019	2960	410.0	ESY827M050AL6(1)
50	63	820	16 x 20	10	0.023	2730	410.0	ESY827M050AM5(1)
50	63	1000	16 x 32	10	0.021	3350	500.0	ESY108M050AM2(1)
63	79	15	5 x 11	9	1.190	136	9.5	ESY156M063AC3(1)
63	79	22	6.3 x 11	9	0.880	176	13.9	ESY226M063AE3(1)
63	79	27	6.3 x 11	9	0.580	192	17.0	ESY276M063AE3(1)
63	79	33	6.3 x 11	9	0.470	216	20.8	ESY336M063AE3(1)
63	79	39	8 x 11	9	0.420	308	24.6	ESY396M063AG3(1)
63	79	47	8 x 11	9	0.350	336	29.6	ESY476M063AG3(1)
63	79	56	8 x 11	9	0.350	400	35.3	ESY566M063AG3(1)
63	79	68	8 x 15	9	0.260	488	42.8	ESY686M063AG4(1)
63	79	68	10 x 12.5	9	0.240	500	42.8	ESY686M063AH9(1)
63	79	82	8 x 15	9	0.220	536	51.7	ESY826M063AG4(1)
63	79	82	10 x 12.5	9	0.200	552	51.7	ESY826M063AH9(1)
63	79	100	10 x 16	9	0.160	640	63.0	ESY107M063AH8(1)
63	79	120	8 x 20	9	0.160	656	75.6	ESY127M063AG6(1)
63	79	120	10 x 16	9	0.150	760	75.6	ESY127M063AH8(1)
63	79	150	10 x 20	9	0.130	808	94.5	ESY157M063AH4(1)
63	79	150	13 x 16	9	0.130	832	94.5	ESY157M063AL2(1)
63	79	180	10 x 20	9	0.110	880	113.4	ESY187M063AH4(1)
63	79	180	13 x 16	9	0.110	912	113.4	ESY187M063AL2(1)
63	79	220	10 x 25	9	0.099	1040	138.6	ESY227M063AH5(1)
63	79	270	13 x 20	9	0.810	1200	170.1	ESY277M063AL3(1)
63	79	330	13 x 25	9	0.058	1480	207.9	ESY337M063AL4(1)
63	79	390	13 x 30	9	0.063	1640	245.7	ESY397M063AL8(1)
63	79	390	16 x 20	9	0.073	1448	245.7	ESY397M063AM5(1)
63	79	470	13 x 30	9	0.061	1800	296.1	ESY477M063AL8(1)
63	79	470	16 x 20	9	0.061	1592	296.1	ESY477M063AM5(1)
63	79	560	13 x 35	9	0.047	1960	352.8	ESY567M063AL6(1)
63	79	560	16 x 25	9	0.043	2040	352.8	ESY567M063AM7(1)
63	79	680	13 x 40	9	0.039	2224	428.4	ESY687M063AL7(1)
63	79	680	18 x 20	9	0.051	1960	428.4	ESY687M063AN4(1)
63	79	820	16 x 32	9	0.035	2248	516.6	ESY827M063AM2(1)
63	79	820	18 x 25	9	0.042	2224	516.6	ESY827M063AN5(1)
63	79	1000	16 x 36	9	0.028	2272	630.0	ESY108M063AM3(1)
63	79	1000	18 x 32	9	0.034	2616	630.0	ESY108M063AN1(1)
63	79	1200	16 x 40	9	0.026	2672	756.0	ESY128M063AM4(1)
63	79	1200	18 x 36	9	0.027	2648	756.0	ESY128M063AN2(1)
63	79	1500	18 x 40	9	0.024	2736	945.0	ESY158M063AN3(1)
100	125	6.8	5 x 11	8	1.400	125	6.8	ESY685M100AC3(1)
100	125	10	6.3 x 11	8	0.950	170	10.0	ESY106M100AE3(1)
100	125	15	6.3 x 11	8	0.570	210	15.0	ESY156M100AE3(1)
100	125	22	8 x 11	8	0.440	330	22.0	ESY226M100AG3(1)
100	125	27	8 x 11	8	0.360	360	27.0	ESY276M100AG3(1)
100	125	33	8 x 15	8	0.300	375	33.0	ESY336M100AG4(1)
100	125	39	8 x 15	8	0.250	450	39.0	ESY396M100AG4(1)
100	125	47	10 x 12.5	8	0.240	450	47.0	ESY476M100AH9(1)
100	125	56	8 x 20	8	0.190	570	56.0	ESY566M100AG6(1)
VDC	**VDC Surge**	**Rated Capacitance**	**Case Size**	**DF**	**Z**	**RC**	**LC**	**Part Number**

(1) Insert packaging code. See Ordering Options Table for available options.

** When capacitance exceeds 1,000 µF, the DF value (%) is increased by 2% for every additional 1,000 µF.*

Table 1 – Ratings & Part Number Reference cont.

VDC	VDC Surge Voltage	Rated Capacitance 120 Hz 20°C (µF)	Case Size D x L (mm)	DF 120 Hz 20°C (tan δ %)*	Z 100 kHZ 20°C (Ω)	RC 100 kHz 105°C (mA)	LC 20°C 2 Minutes (µA)	Part Number
100	125	68	10 x 16	8	0.180	580	68.0	ESY686M100AH8(1)
100	125	82	10 x 20	8	0.130	750	82.0	ESY826M100AH4(1)
100	125	82	13 x 16	8	0.130	740	82.0	ESY826M100AL2(1)
100	125	100	10 x 25	8	0.120	880	100.0	ESY107M100AH5(1)
100	125	120	13 x 20	8	0.094	1050	120.0	ESY127M100AL3(1)
100	125	150	13 x 25	8	0.085	1100	150.0	ESY157M100AL4(1)
100	125	180	13 x 25	8	0.071	1200	180.0	ESY187M100AL4(1)
100	125	220	13 x 30	8	0.063	1410	220.0	ESY227M100AL8(1)
100	125	220	16 x 20	8	0.071	1300	220.0	ESY227M100AM5(1)
100	125	270	13 x 35	8	0.052	1560	270.0	ESY277M100AL6(1)
100	125	270	16 x 25	8	0.053	1600	270.0	ESY277M100AM7(1)
100	125	270	18 x 20	8	0.069	1470	270.0	ESY277M100AN4(1)
100	125	330	13 x 40	8	0.046	1700	330.0	ESY337M100AL7(1)
100	125	390	16 x 32	8	0.041	1750	390.0	ESY397M100AM2(1)
100	125	390	18 x 25	8	0.049	1620	390.0	ESY397M100AN5(1)
100	125	470	16 x 36	8	0.033	1890	470.0	ESY477M100AM3(1)
100	125	470	18 x 32	8	0.039	1780	470.0	ESY477M100AN1(1)
100	125	560	16 x 40	8	0.030	2080	560.0	ESY567M100AM4(1)
100	125	560	18 x 36	8	0.031	2060	560.0	ESY567M100AN2(1)
100	125	680	18 x 40	8	0.028	2570	680.0	ESY687M100AN3(1)
VDC	**VDC Surge**	**Rated Capacitance**	**Case Size**	**DF**	**Z**	**RC**	**LC**	**Part Number**

(1) Insert packaging code. See Ordering Options Table for available options.

** When capacitance exceeds 1,000 µF, the DF value (%) is increased by 2% for every additional 1,000 µF.*

Mounting Positions (Safety Vent)

In operation, electrolytic capacitors will always conduct a leakage current, which causes electrolysis. The oxygen produced by electrolysis will regenerate the dielectric layer but, at the same time, the hydrogen released may cause the internal pressure of the capacitor to increase. The overpressure vent, or safety vent, ensures that the gas can escape when the pressure reaches a certain value. All mounting positions must allow the safety vent to work properly.

Installing

- As a general principle, lower-use temperatures result in a longer, useful life of the capacitor. For this reason, it should be ensured that electrolytic capacitors are placed away from heat-emitting components. Adequate space should be allowed between components for cooling air to circulate, particularly when high ripple current loads are applied. In any case, the maximum category temperature must not be exceeded.
- Do not deform the case of the capacitors or use capacitors with a deformed case.
- Verify that the connections of the capacitors are able to insert on the board without excessive mechanical force.
- If the capacitors require mounting through additional means, the recommended mounting accessories shall be used.
- Verify the correct polarization of the capacitor on the board.
- Verify that the space around the pressure relief device is according to the following guideline:

Case Diameter	Space Around Safety Vent
≤ 16 mm	> 2 mm
> 16 to ≤ 40 mm	> 3 mm
> 40 mm	> 5 mm

It is recommended that capacitors always be mounted with the safety device uppermost or in the upper part of the capacitor.

- If the capacitors are stored for a long time, the leakage current must be verified. If the leakage current is superior to the value listed in this catalog, the capacitors must be reformed. In this case, they can be reformed by application of the rated voltage through a series resistor approximately 1 kΩ for capacitors with V_R ≤ 160 V (5 W resistor) and 10 kΩ for the other rated voltages.
- In the case of capacitors connected in a series, a suitable voltage sharing must be used.
  In the case of balancing resistors, the approximate resistance value can be calculated as: R = 60/C.

KEMET recommends, nevertheless, to ensure that the voltage across each capacitor does not exceed its rated voltage.

Application & Operation Guidelines

Electrical Ratings:
Capacitance (ESC)

Simplified equivalent circuit diagram of an electrolytic capacitor

The capacitive component of the equivalent series circuit, (equivalent series capacitance - ESC), is determined by applying an alternate voltage of ≤ 0.5 V at a frequency of 120 or 100 Hz and 20°C (IEC 384-1, 384-4).

Temperature Dependence of the Capacitance
Capacitance of an electrolytic capacitor depends upon temperature: with decreasing temperature the viscosity of the electrolyte increases, thereby reducing its conductivity.
Capacitance will decrease if temperature decreases. Furthermore, temperature drifts cause armature dilatation and, therefore, capacitance changes (up to 20% depending on the series considered, from 0 to 80°C). This phenomenon is more evident for electrolytic capacitors than for other types.

Frequency Dependence of the Capacitance
Effective capacitance value is derived from the impedance curve, as long as impedance is still in the range where the capacitance component is dominant.

$$C = \frac{1}{2\pi fZ}$$

C = capacitance (F)
f = frequency (Hz)
Z = impedance (Ω)

Dissipation Factor tan δ (DF)
Dissipation Factor tan δ is the ratio between the active and reactive power for a sinusoidal waveform voltage. It can be thought of as a measurement of the gap between an actual and ideal capacitor.

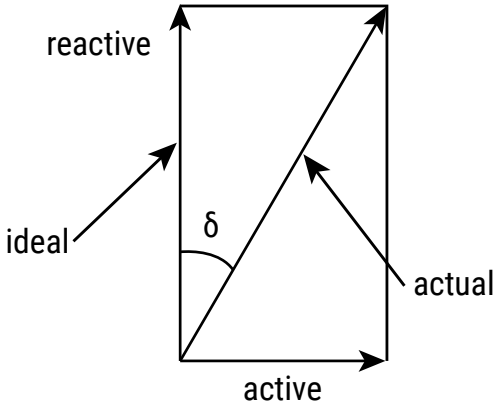

Tan δ is measured with the same set-up used for the series capacitance ESC.
Tan δ = ω x ESC x ESR where:
ESC = Equivalent series capacitance
ESR = Equivalent series resistance

Application & Operation Guidelines cont.

Equivalent Series Inductance (ESL)
Equivalent series inductance or self inductance results from the terminal configuration and internal design of the capacitor.

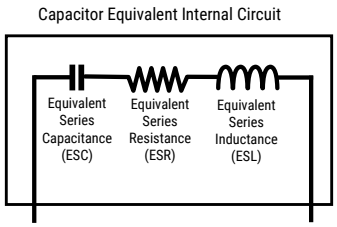

Equivalent Series Resistance (ESR)
Equivalent series resistance is the resistive component of the equivalent series circuit. ESR value depends on frequency and temperature, and is related to the tan δ by the following equation:

$$ESR = \frac{\tan \delta}{2\pi f\ ESC}$$

ESR = Equivalent series resistance (Ω)
tan δ = Dissipation factor
ESC = Equivalent series capacitance (F)
f = Frequency (Hz)

Tolerance limits of the rated capacitance must be taken into account when calculating this value.

Impedance (Z)
Impedance of an electrolytic capacitor results from a circuit formed by the following individual equivalent series components:

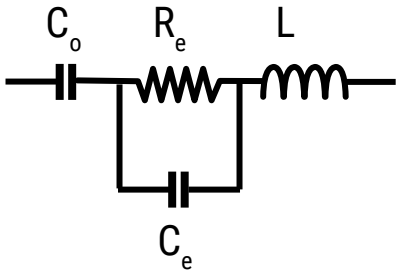

C_o = Aluminum oxide capacitance (surface and thickness of the dielectric.)
R_e = Resistance of electrolyte and paper mixture (other resistances not depending on the frequency are not considered: tabs, plates, etc.)
C_e = Electrolyte soaked paper capacitance.
L = Inductive reactance of the capacitor winding and terminals.
Impedance of an electrolytic capacitor is not a constant quantity that retains its value under all conditions; it changes depending on frequency and temperature.
Impedance as a function of frequency (sinusoidal waveform) for a certain temperature can be represented as follows:

Application & Operation Guidelines cont.

Impedance (Z) cont.

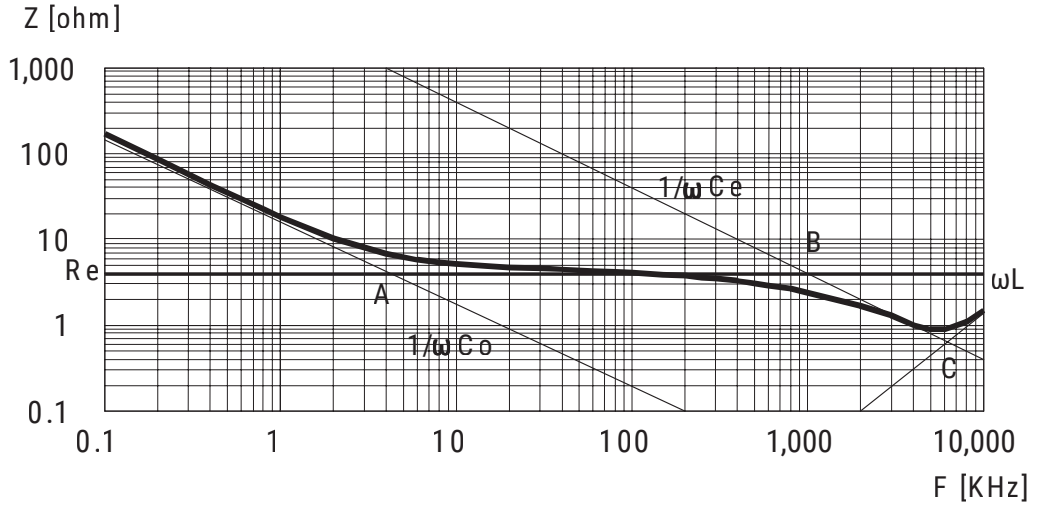

- Capacitive reactance predominates at low frequencies.
- With increasing frequency, capacitive reactance $Xc = 1/\omega C_o$ decreases until it reaches the order of magnitude of electrolyte resistance R_e(A)
- At even higher frequencies, resistance of the electrolyte predominates: $Z = R_e$ (A - B)
- When the capacitor's resonance frequency is reached (ω_0), capacitive and inductive reactance mutually cancel each other $1/\omega C_e = \omega L$, $\omega_0 = 1/SQR(LC_e)$
- Above this frequency, inductive reactance of the winding and its terminals (XL = Z = ωL) becomes effective and leads to an increase in impedance

Generally speaking, it can be estimated that $C_e \approx 0.01\ C_o$.

Impedance as a function of frequency (sinusoidal waveform) for different temperature values can be represented as follows (typical values):

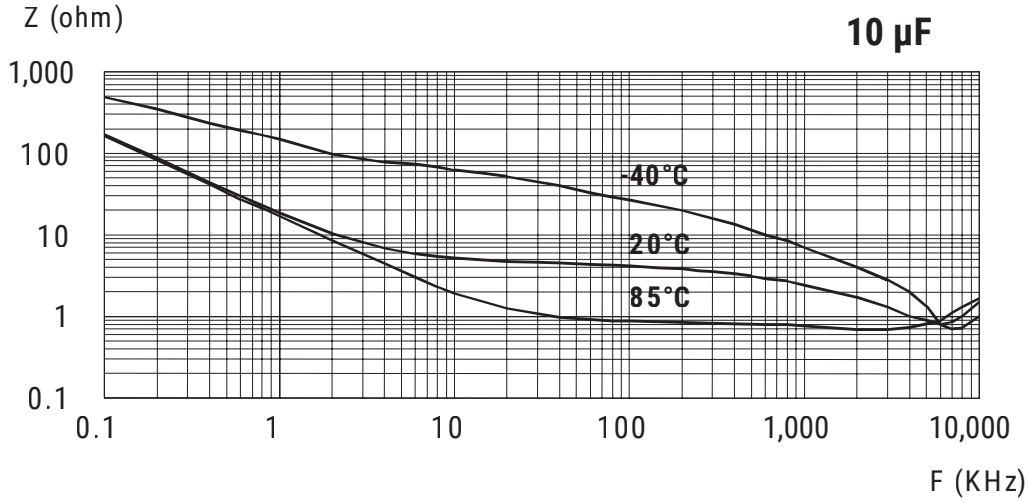

R_e is the most temperature-dependent component of an electrolytic capacitor equivalent circuit. Electrolyte resistivity will decrease if temperature rises.

In order to obtain a low impedance value throughout the temperature range, R_e must be as little as possible. However, R_e values that are too low indicate a very aggressive electrolyte, resulting in a shorter life of the electrolytic capacitor at high temperatures. A compromise must be reached.

Application & Operation Guidelines cont.

Leakage Current (LC)
Due to the aluminum oxide layer that serves as a dielectric, a small current will continue to flow even after a DC voltage has been applied for long periods. This current is called leakage current.

A high leakage current flows after applying voltage to the capacitor then decreases in a few minutes, for example, after prolonged storage without any applied voltage. In the course of continuous operation, the leakage current will decrease and reach an almost constant value.

After a voltage-free storage the oxide layer may deteriorate, especially at a high temperature. Since there are no leakage currents to transport oxygen ions to the anode, the oxide layer is not regenerated. The result is that a higher than normal leakage current will flow when voltage is applied after prolonged storage.

As the oxide layer is regenerated in use, the leakage current will gradually decrease to its normal level.
The relationship between the leakage current and voltage applied at constant temperature can be shown schematically as follows:

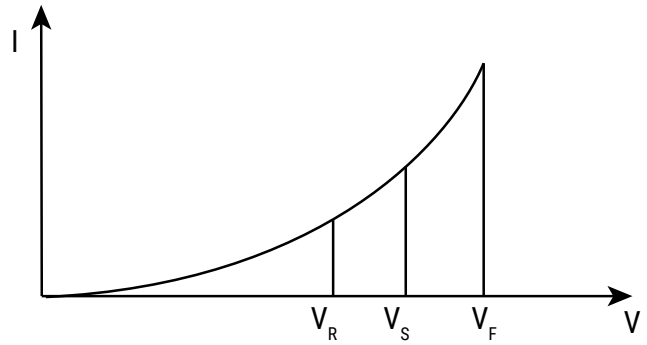

Where:
V_F = Forming voltage
If this level is exceeded, a large quantity of heat and gas will be generated and the capacitor could be damaged.
V_R = Rated voltage
This level represents the top of the linear part of the curve.
V_S = Surge voltage
This lies between V_R and V_F. The capacitor can be subjected to V_S for short periods only.

Electrolytic capacitors are subjected to a reforming process before acceptance testing. The purpose of this preconditioning is to ensure that the same initial conditions are maintained when comparing different products.

Ripple Current (RC)
The maximum ripple current value depends on:
- Ambient temperature
- Surface area of the capacitor (heat dissipation area)
tan δ or ESR
- Frequency

The capacitor's life depends on the thermal stress.

Application & Operation Guidelines cont.

Frequency Dependence of the Ripple Current

ESR and, thus, the tan δ depend on the frequency of the applied voltage. This indicates that the allowed ripple current is also a function of the frequency.

Temperature Dependence of the Ripple Current

The data sheet specifies maximum ripple current at the upper category temperature for each capacitor.

Expected Life Calculation

Expected life depends on operating temperature according to the following formula: $L = Lo \times 2^{(To-T)/10}$

Where:

L: Expected life

Lo: Load life at a maximum permissible operating temperature

T: Actual operating temperature

To: Maximum permissible operating temperature

This formula is applicable between 40°C and To.

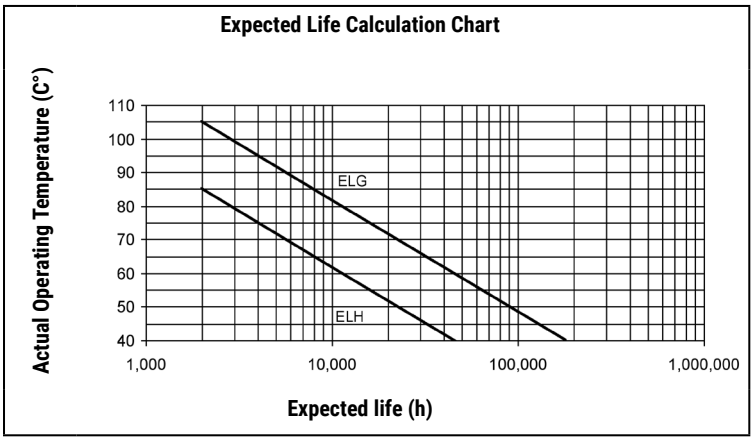

Packaging Quantities

Size Code	Diameter (mm)	Length (mm)	Bulk		Auto-insertion	
			Standard Leads	Cut Leads	Ammo	Tape & Reel
B2	4.0	7.0	10,000	15,000	2,500	3,000
C2	5.0	7.0	10,000	15,000	2,000	2,600
C3	5.0	11.0	10,000	15,000	2,000	2,600
E2	6.3	7.0	10,000	15,000	2,000	2,200
E3	6.3	11.0	10,000	15,000	2,000	2,200
G1	8.0	7.0	6,000	8,000	1,000	1,500
G3	8.0	11.0	6,000	8,000	1,000	1,500
G4	8.0	15.0	5,000	5,000	1,000	1,500
G8	8.0	16.0	5,000	5,000	1,000	1,500
G6	8.0	20.0	4,000	4,000	1,000	1,500
H9	10.0	12.5	4,000	4,000	700	1,200
H8	10.0	16.0	3,000	4,000	700	1,200
H4	10.0	20.0	2,400	3,000	700	1,200
H5	10.0	25.0	2,400	2,400	500	
L2	13.0	16.0	2,400	2,400	500	
L3	13.0	20.0	2,000	2,000	500	
L4	13.0	25.0	1,600	1,600	500	
L8	13.0	30.0	1,200	1,200	500	
L6	13.0	35.0	1,000	500	500	
L7	13.0	40.0	1,000	500	500	
M5	16.0	20.0	1,000	500	300	
M7	16.0	25.0	1,000	500	300	
M2	16.0	32.0	800	500	300	
M3	16.0	36.0	600	500	300	
M4	16.0	40.0	600	500	300	
N4	18.0	20.0	800	500	300	
N5	18.0	25.0	800	500	300	
N1	18.0	32.0	500	500		
N2	18.0	36.0	500	500		
N3	18.0	40.0	500	500		

Marking

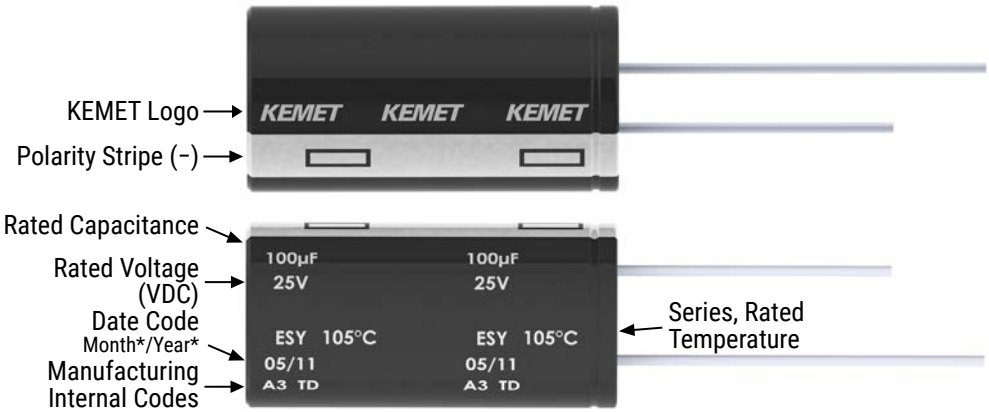

*Y = Year

Code	01	02	03	04	05	06	07	08	09
Year	2011	2012	2013	2014	2015	2016	2017	2018	2019

*M = Month

Code	01	02	03	04	05	06	07	08	09	10	11	12
Month	1	2	3	4	5	6	7	8	9	10	11	12

Construction

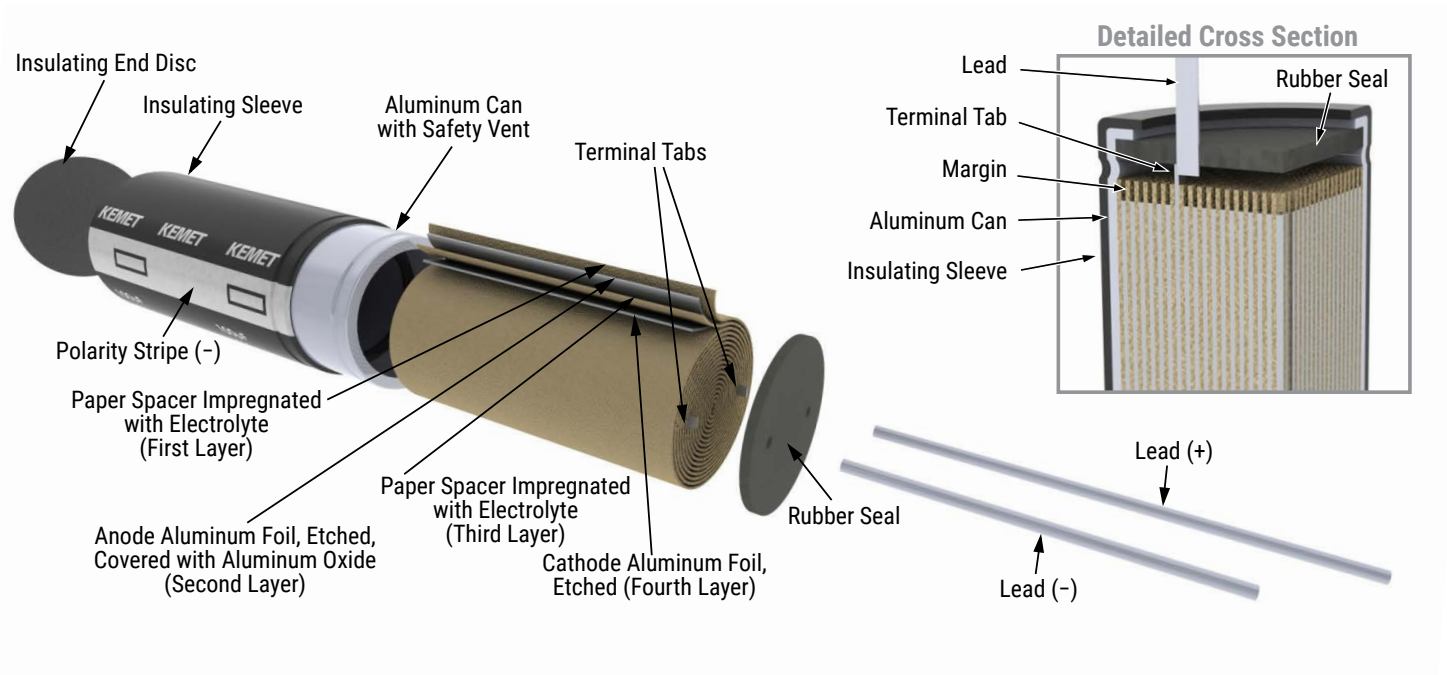

Taping for Automatic Insertion Machines

Formed to 2.5 mm
(Lead and packaging code LA and FA)

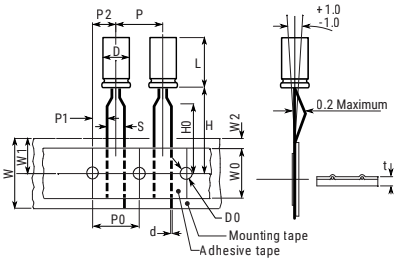

Formed to 5 mm
(Lead and packaging code JA and DA)

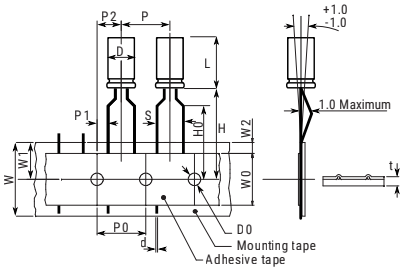

Straight Leads (Diameter: 4 – 8 mm)
Lead and packaging code EA and KA

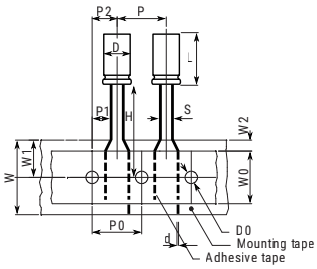

Straight Leads (Diameter > 8)
Lead and packaging code EA and KA

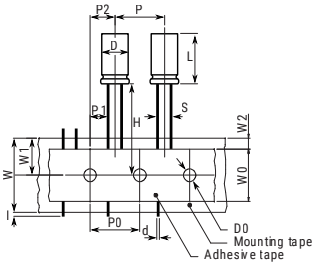

Dimensions (mm)	D	L	S	d	P	P0	P1	P2	W	W0	W1	W2	H0	H1	l	D0	t
Tolerance	**+0.5**		**+0.8/−0.2**	**±0.05**	**±1.0**	**±0.3**	**±0.7**	**±1.3**	**+1/−0.5**	**±0.5**	**Maximum**	**Maximum**	**±0.75**	**±0.5**	**Maximum**	**±0.2**	**±0.2**
Formed to 2.5 mm	4	5 – 7	2.5	0.45	12.7	12.7	5.1	6.35	18	12	11	3	16.0	18.5		4	0.7
	5	≤ 7	2.5	0.45	12.7	12.7	5.1	6.35	18	12	11	3	16.0	18.5		4	0.7
		> 7	2.5	0.50	12.7	12.7	5.1	6.35	18	12	11	3	16.0	18.5		4	0.7
Formed to 5 mm	4	5 – 7	5.0	0.45	12.7	12.7	3.85	6.35	18	12	11	3	16.0	18.5		4	0.7
	5	≤ 7	5.0	0.45	12.7	12.7	3.85	6.35	18	12	11	3	16.0	18.5		4	0.7
		>7	5.0	0.50	12.7	12.7	3.85	6.35	18	12	11	3	16.0	18.5		4	0.7
	6	≤ 7	5.0	0.50	12.7	12.7	3.85	6.35	18	12	11	3	16.0	18.5		4	0.7
		> 7	5.0	0.50	12.7	12.7	3.85	6.35	18	12	11	3	16.0	18.5		4	0.7
	8	≤ 7	5.0	0.50	12.7	12.7	3.85	6.35	18	12	11	3	16.0	18.5		4	0.7
		> 7	5.0	0.50	12.7	12.7	3.85	6.35	18	12	11	3	16.0	18.5		4	0.7
Straight leads	4	5 – 7	1.5	0.45	12.7	12.7	5.6	6.35	18	12	11	3	18.5			4	0.7
	5	≤ 7	2.0	0.45	12.7	12.7	5.35	6.35	18	12	11	3	18.5			4	0.7
		> 7	2.0	0.50	12.7	12.7	5.35	6.35	18	12	11	3	18.5			4	0.7
	6	≤ 7	2.5	0.50	12.7	12.7	5.1	6.35	18	12	11	3	18.5			4	0.7
		> 7	2.5	0.50	12.7	12.7	5.1	6.35	18	12	11	3	18.5			4	0.7
	8	≤ 7	3.5	0.50	12.7	12.7	4.6	6.35	18	12	11	3	18.5			4	0.7
		> 7	3.5	0.50	12.7	12.7	4.6	6.35	18	12	11	3	18.5			4	0.7
	10	≤ 20	5.0	0.60	12.7	12.7	3.85	6.35	18	12	11	3	18.5		1	4	1.0

Lead Taping & Packaging

Ammo Box

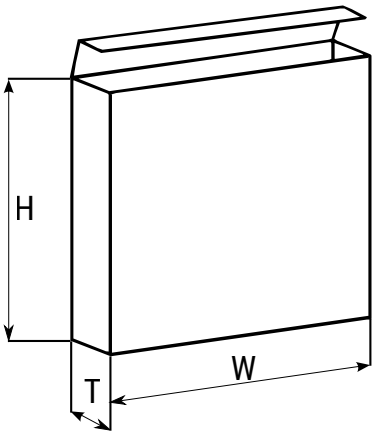

Reel

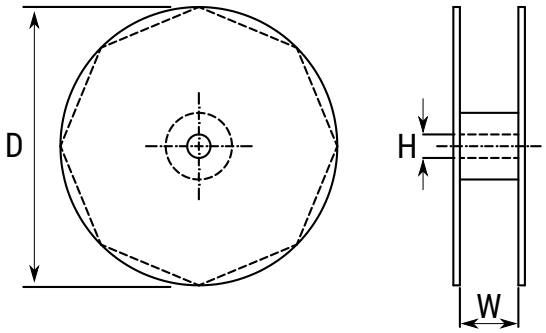

Diameter	Length	Ammo			Reel		
		H	W	T	D	H	W
			Maximum	Maximum	±2	±0.5	+1/−0.1
4	All	230	340	42	350	30	50
5	≤ 7	230	340	42			
5	11	275	340	42			
6.3	≤ 7	235	340	45			
6.3	11	230	340	48			
8	≤ 7	270	340	48			
8	11	235	340	48			
8	>11 ≤ 20	240	340	57			
10	≤ 13	250	340	52			
10	>13 ≤ 20	256	340	57			
10	>20	250	340	60	NA	NA	NA
12	All	270	340	57			
13	All	285	340	62			
16	All	265	340	62			
18	All	288	340	65			

Construction Data

The manufacturing process begins with the anode foil being electrochemically etched to increase the surface area and then "formed" to produce the aluminum oxide layer. Both the anode and cathode foils are then interleaved with absorbent paper and wound into a cylinder. During the winding process, aluminum tabs are attached to each foil to provide the electrical contact.

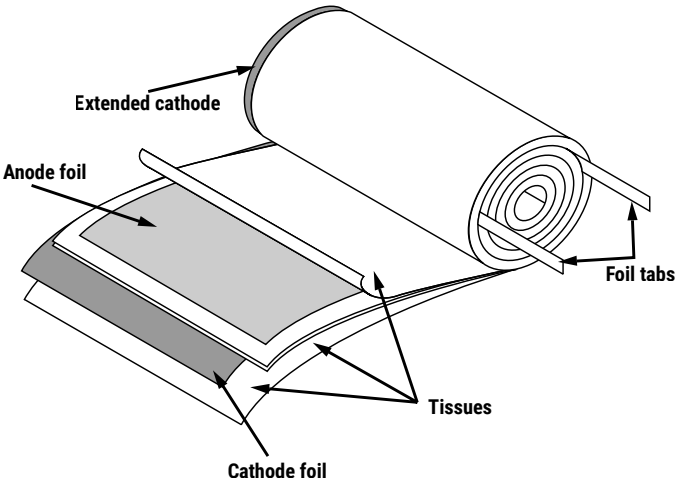

The deck, complete with terminals, is attached to the tabs and then folded down to rest on top of the winding. The complete winding is impregnated with electrolyte before being housed in a suitable container, usually an aluminum can, and sealed. Throughout the process, all materials inside the housing must be maintained at the highest purity and be compatible with the electrolyte.

Each capacitor is aged and tested before being sleeved and packed. The purpose of aging is to repair any damage in the oxide layer and thus reduce the leakage current to a very low level. Aging is normally carried out at the rated temperature of the capacitor and is accomplished by applying voltage to the device while carefully controlling the supply current. The process may take several hours to complete.

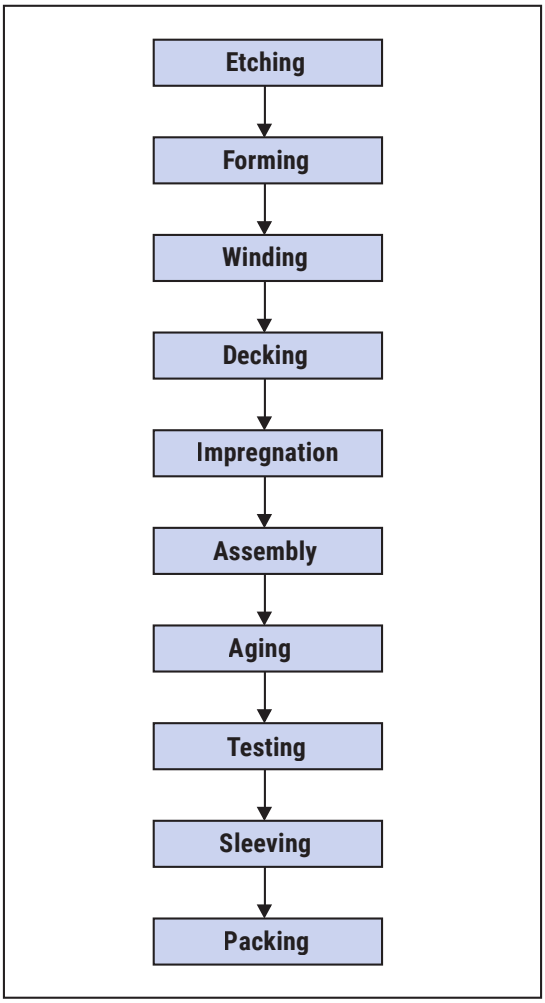

Damage to the oxide layer can occur due to variety of reasons:
- Slitting of the anode foil after forming
- Attaching the tabs to the anode foil
- Minor mechanical damage caused during winding

A sample from each batch is taken by the quality department after completion of the production process. This sample size is controlled by the use of recognized sampling tables defined in BS 6001.

The following tests are applied and may be varied at the request of the customer. In this case the batch, or special procedure, will determine the course of action.

Electrical:
- Leakage current
- Capacitance
- ESR
- Impedance
- Tan Delta

Mechanical/Visual:
- Overall dimensions
- Torque test of mounting stud
- Print detail
- Box labels
- Packaging, including packed quantity

KEMET Electronics Corporation Sales Offices

For a complete list of our global sales offices, please visit www.kemet.com/sales.

Disclaimer

All product specifications, statements, information and data (collectively, the "Information") in this datasheet are subject to change. The customer is responsible for checking and verifying the extent to which the Information contained in this publication is applicable to an order at the time the order is placed. All Information given herein is believed to be accurate and reliable, but it is presented without guarantee, warranty, or responsibility of any kind, expressed or implied.

Statements of suitability for certain applications are based on KEMET Electronics Corporation's ("KEMET") knowledge of typical operating conditions for such applications, but are not intended to constitute – and KEMET specifically disclaims – any warranty concerning suitability for a specific customer application or use. The Information is intended for use only by customers who have the requisite experience and capability to determine the correct products for their application. Any technical advice inferred from this Information or otherwise provided by KEMET with reference to the use of KEMET's products is given gratis, and KEMET assumes no obligation or liability for the advice given or results obtained.

Although KEMET designs and manufactures its products to the most stringent quality and safety standards, given the current state of the art, isolated component failures may still occur. Accordingly, customer applications which require a high degree of reliability or safety should employ suitable designs or other safeguards (such as installation of protective circuitry or redundancies) in order to ensure that the failure of an electrical component does not result in a risk of personal injury or property damage.

Although all product–related warnings, cautions and notes must be observed, the customer should not assume that all safety measures are indicted or that other measures may not be required.

KEMET is a registered trademark of KEMET Electronics Corporation.

Mouser Electronics

Authorized Distributor

Click to View Pricing, Inventory, Delivery & Lifecycle Information:

KEMET:

ESY397M100AN5AA ESY108M035AL4AA ESY108M063AM3AA ESY687M063AN4AA ESY477M050AL3AA
ESY277M063AL3AA ESY337M035AH2AA ESY477M025AG6AA ESY477M035AH4AA ESY227M050AH2AA
ESY227M035AH1AA ESY337M025AG8AA ESY107M050AG3AA ESY107M025AE3AA ESY108M010AG6AA
ESY108M010AH2EA ESY108M016AH4AA ESY158M010AH5AA ESY158M016AL3AA ESY228M016AL4AA
ESY338M010AL4AA ESY476M025AC3EA ESY476M100AH1AA ESY477M016AG8AA ESY687M016AG6AA
ESY687M035AL3AA ESY827M025AH5AA ESY687M063AN4EA ESY156M035AC2AA ESY188M063AN3AA
ESY477M025AH2AA ESY128M6R3AH8AA ESY826M063AG8AA ESY827M050AM5AA ESY566M050AE3AA
ESY477M063AM5AA ESY277M035AG6AA ESY228M6R3AH5AA ESY227M035AG8AA ESY107M035AG3AA
ESY827M6R3AG8AA ESY686M050AG3AA ESY686M100AH2AA ESY687M010AG8AA ESY687M025AH4AA
ESY687M050AL8AA ESY687M100AN3AA ESY477M100AN1AA ESY477M6R3AG3AA ESY566M100AG6AA
ESY567M035AH5AA ESY567M063AM7AA ESY686M025AE3AA ESY476M050AE3DA ESY476M063AG3AA
ESY477M010AG3AA ESY477M016AH1AA ESY477M063AL8AA ESY477M100AM3AA ESY337M050AH5AA
ESY337M063AL4AA ESY337M100AL7AA ESY476M016AC3AA ESY476M035AE3AA ESY476M050AE3AA
ESY336M035AC3AA ESY336M063AE3AA ESY336M100AG7AA ESY337M010AG3AA ESY337M016AG3AA
ESY337M025AH1AA ESY276M025AC2AA ESY276M035AC3AA ESY277M025AH1AA ESY277M050AH4AA
ESY336M016AC2AA ESY336M025AC3AA ESY226M100AG3AA ESY227M016AG3AA ESY227M025AG3AA
ESY227M100AL8AA ESY227M100AM5AA ESY228M010AL3AA ESY157M025AG3AA ESY157M035AG3AA
ESY157M050AH1AA ESY158M063AN3AA ESY158M6R3AH4AA ESY226M063AE3AA ESY108M063AN1AA
ESY108M6R3AH1AA ESY127M100AL3AA ESY156M050AC3AA ESY156M063AC3AA ESY156M100AE3AA
ESY107M063AH2AA ESY106M035AB2AA ESY106M100AE3AA ESY107M016AE3AA ESY107M100AH5AA