Electronic Components
KEMET
CHARGED.®

Ceramic Capacitors

TOTAL QUALITY APPROACH

Arcotronics Italia S.p.A, founded in 1962 as Arco S.p.A, has worldwide operations with manufacturing facilities in Italy, Germany, U.K. and Bulgaria and a total of approximately 1500 employees.

Arcotronics is one of the world's leading producers of plastic film and metallized plastic film capacitors for electric and electronic applications. Arcotronics also produces a variety of wet tantalum capacitors, power factor correction devices and RFI (Radio Frequency Interference) filters for the suppression of electromagnetic noise.

The development and production of Arcotronics capacitors is geared to technologically advanced fields of applications where high reliability combined with large production volumes is essential.

Arcotronics Machinery Division supports this commitment by designing and producing sophisticated state-of-the-art production equipment and automatic assembly lines for the manufacturing of components.

The dynamic thrust of the modern electronic industry requires a highly reactive organization together with a product and service quality capable of meeting the customers' requirements throughout the world.

A strategic key for increasing Arcotronics competitiveness in the world market is the continuous improvement of its quality management system. The certification according to ISO 9001 and QS 9000 standards, whose strict requirements are demanded by the automotive market, witness some of the most important achievements of Arcotronics throughout the years.

The development and involvement of human resources at all levels, through a suitable state of mind and the use of appropriate methods and techniques, are still to be considered as the most effective factors for the constant improvement and expansion of Arcotronics presence on the market, proving its technical and technological capability, the quality of its products/service and organization.

ISO 9001

CSQ is a member of IQNet

CSQ

CERTIFICATO N. / CERTIFICATE N. 9105.ARC8

SI CERTIFICA CHE IL SISTEMA QUALITA' DI / WE HEREBY CERTIFY THAT THE QUALITY SYSTEM OPERATED BY

ARCOTRONICS ITALIA SPA
VIA S. LORENZO 19 - 40037 SASSO MARCONI (BO)

UNITA' OPERATIVE / OPERATIVE UNITS
ARCOTRONICS INDUSTRIES - SASSO MARCONI
VIA S. LORENZO, 19 - 40037 SASSO MARCONI (BO)
ARCOTRONICS INDUSTRIES - VERGATO
VIA DELLA REPUBBLICA 673 - 40038 VERGATO (BO)
ARCOTRONICS HIGHTECH - MONGHIDORO
VIA SAVENA, 3 - 40063 MONGHIDORO (BO)

E' CONFORME ALLA NORMA / IS IN COMPLIANCE WITH THE STANDARD
ISO 9001:2000

PER LE SEGUENTI ATTIVITA' / FOR THE FOLLOWING ACTIVITIES
EA: 19

Progettazione, produzione e commercializzazione di componenti ed apparecchiature elettriche (quali ad es. condensatori, varistori, filtri ed apparecchiature per il rifasamento industriale) e di film plastico metallizzato
Design, manufacturing and trading of electric and electronic components and units (such as capacitors, varistors, filters and power factor correction units) and metallized plastic film

Riferirsi al manuale della qualità per l'applicabilità dei requisiti della norma ISO 9001:2000
Refer to quality manual for details of applications to ISO 9001:2000 requirements

IL PRESENTE CERTIFICATO E' SOGGETTO AL RISPETTO DEL REGOLAMENTO PER LA CERTIFICAZIONE DEI SISTEMI QUALITA' E DI GESTIONE DELLE AZIENDE
THE USE AND THE VALIDITY OF THE CERTIFICATE SHALL SATISFY THE REQUIREMENTS OF THE RULES FOR THE CERTIFICATION OF COMPANY QUALITY AND MANAGEMENT SYSTEMS

PRIMA EMISSIONE / FIRST ISSUE 29 giugno 1998
EMISSIONE CORRENTE / CURRENT ISSUE 20 gennaio 2003

IMQ S.p.A. - VIA QUINTILIANO, 43 - 20138 MILANO

SINCERT

CISQ

QS 9000

CSQ is a member of IQNet

CSQ AUTO

CERTIFICATO N. / CERTIFICATE N. 9136.ARC9

SI CERTIFICA CHE IL SISTEMA QUALITA' DI / WE HEREBY CERTIFY THAT THE QUALITY SYSTEM OPERATED BY

ARCOTRONICS ITALIA SPA
VIA S. LORENZO 19 - 40037 SASSO MARCONI (BO)

UNITA' OPERATIVE / OPERATIVE UNITS
ARCOTRONICS INDUSTRIES - SASSO MARCONI
VIA S. LORENZO, 19 - 40037 SASSO MARCONI (BO)
ARCOTRONICS INDUSTRIES - VERGATO
VIA DELLA REPUBBLICA 673 - 40038 VERGATO (BO)
ARCOTRONICS HIGHTECH - MONGHIDORO
VIA SAVENA, 3 - 40063 MONGHIDORO (BO)

E' CONFORME ALLA NORMA / IS IN COMPLIANCE WITH THE STANDARD
QS 9000

PER LE SEGUENTI ATTIVITA' / FOR THE FOLLOWING ACTIVITIES
EA: 19

Progettazione, produzione e commercializzazione di componenti ed apparecchiature elettriche (quali ad es. condensatori, varistori, filtri ed apparecchiature per il rifasamento industriale) per applicazioni nell'industria automobilistica
Design, manufacturing and trading of electric and electronic components and units (such as capacitors, varistors, filters and power factor correction units) for automotive applications

IL PRESENTE CERTIFICATO E' SOGGETTO AL RISPETTO DEL REGOLAMENTO PER LA CERTIFICAZIONE DEI SISTEMI QUALITA' E DI GESTIONE DELLE AZIENDE
THE USE AND THE VALIDITY OF THE CERTIFICATE SHALL SATISFY THE REQUIREMENTS OF THE RULES FOR THE CERTIFICATION OF COMPANY QUALITY AND MANAGEMENT SYSTEMS

PRIMA EMISSIONE / FIRST ISSUE 29 giugno 1998
EMISSIONE CORRENTE / CURRENT ISSUE 20 gennaio 2003

IMQ S.p.A. - VIA QUINTILIANO, 43 - 20138 MILANO

La visita ispettiva è stata condotta in conformità alla Appendice B di QS-9000 QS
The audit has been performed in accordance with the requirements of the QS 9000, Appendix B Code of Practice

SINCERT

CISQ

GENERAL INFORMATION

Ceramic Capacitors

Please refer to our Internet address (http://www.kemet.com) for updated information on KEMET products, service and news.

CONTENTS	*Page*
General Information	**2 - 13**
Technical terms explanation	2
Application note-safety conditions	2
Product Code System and Date Code	11
Packaging	12
Ceramic capacitors	13 - 23
Contents	14
KHB series Class 2 General purpose 1 - 2KVdc	17
KHC series Class 1 General purpose 1 - 2KVdc	19
KJN series Y1 (250Vac/400Vac) / X1 (440Vac)	21
KJY series Y2 (250Vac) / X1 (400Vac)	23

Statements of suitability for certain applications are based on our knowledge of typical operating conditions for such applications, but are not intended to constitute – and we specifically disclaim – any warranty concerning suitability for a specific customer application or use. This information is intended for use only by customers who have the requisite experience and capability to determine the correct products for their application. Any technical advice inferred from this information or otherwise provided by us with reference to the use of our products is given gratis, and we assume no obligation or liability for the advice given or results obtained.

GENERAL INFORMATION

TECHNICAL TERMS EXPLANATION

Rated capacitance

Capacitance referred to 1 kHz, 20±1°C, 65±2% of relative humidity and 96 ±10 kPa.
In case of doubt please refer to IEC 60068-1, sub-clause 5.2.

Capacitance tolerance

Admitted capacitance deviation from the rated capacitance.

Rated temperature (T_R)

The maximum ambient temperature surrounding the capacitor or hottest contact point (e.g.: tracks), whichever is higher, at which the rated voltage, Vdc or Vac at 50 Hz, may be continuously applied.

Rated voltage (V_R)

The maximum direct voltage or the maximum r.m.s. alternating voltage (50Hz) or the peak value of a pulse voltage which may be continuously applied to a capacitor at any temperature between the lower category temperature and the rated temperature.

Climatic category

The climatic category which the capacitor belongs to is expressed in numbers (standard IEC 60068-1: e.g.: 25/125/21).
The first number represents the lower category temperature (e.g.: -25°C); the second number the upper category temperature (e.g.: +125°C) and the third number represents the number of days relevant to the damp heat test (e.g.: 21 days).

Dissipation factor (tgδ)

The dissipation factor is the ratio between the resistive and the reactive part of the impedance of the capacitor submitted to a sinusoidal voltage of specified frequency.

Insulation resistance (Ir)

The insulation resistance is the ratio between an applied D.C. voltage and the resulting leakage current after a minute of charge. It is expressed in MΩ.

APPLICATION NOTES - SAFETY CONDITIONS

1. Across-the-line and interference suppression applications

1.1 When a capacitor is used for this type of application it may be subject to a mains voltage on a permanent basis and to surges caused, for example, by lightning, power commutations etc.
In these working conditions the capacitor must be a \component with a safety margin able to satisfy the main International Standards, e.g.:

- IEC 60384-14 (2nd Ed. 1993 + amendment 1-95) (International Standard)
- EN 132400 (similar to the previous) (European Standard)
- UL 1414, UL 1283 (American Standards)
- CSA C22.2 Nr. 1 (Canadian Standards)

For safety reasons it is advisable to use components approved according to the above mentioned standards.

1.2 Main safety tests related to IEC 60384-14 (2nd Ed. 1993 + amendment 1-95) and EN132400 are listed at page 8.

2. Special working conditions

- Humid ambient.

If used for a long time in a humid ambient, the capacitor might absorb humidity and oxides the electrodes causing breakdown of the capacitor.

3. Standards

The international standards for the ceramic capacitor are:

- EN 130600 and IEC 60384-8 fixed capacitors of ceramic dielectric, class 1;
- EN 130700 and IEC 60384-9 fixed capacitors of ceramic dielectric, class 2;
- EN 132400: UL 1414; IEC 60384-14.2; CSA C22.2 RFI and safety capacitor.

GENERAL INFORMATION

4. General data

Ceramic capacitors are widely used in electronic circuit for coupling, decoupling and in filters. These different functions require specific capacitor properties.
Ceramic capacitors can be divided into two classes:

• Class 1

In these capacitors, ceramic materials are used which have a very high specific resistance, low dissipation factor up to higher frequencies and linear temperature dependence (ε_r from 80 up to 300).
A Class 1 capacitors are not sensitive to temperature changes, thus the capacitance value of a capacitor measured at a low temperature (e.g.: -25°C) will not significantly vary from the same capacitor measured at a higher temperature (e.g.: 75°C). EIA refers to these as “temperature compensating”, and are measured in ppm/°C. An example of such is found below:

NP0 = ±30ppm over a temperature range of -55 up to +85°C

The material used has not ferroelectric properties and therefore they are not susceptible tho the ageing phenomenon.
They are used in such applications as oscillators and filter where low losses, capacitance drift compensation and narrow capacitance tolerances are demanded; the capacitance stability regardless of their temperature, also make them an excellent choice for applications in which frequency control is needed such as in radio or television tuners.

• Class 2

A Class 2 capacitor (e.g.: X7R, Y5V, Z5U) is made from ceramic materials that are derived from a barium titanate base which is temperature sensitive: these capacitors have a non-linear dependence of capacitance on temperature and voltage.
Examples of Class 2 Temperature Characteristics are below:

X7R = ±15% over a temperature range of -55 up to 125°C
Y5V = +22% / -82% over a temperature range of -30 up to 85°C

Additionally, capacitors made from barium titanate bases are ferroelectric and therefore susceptible to “ageing” in which a capacitor’s ability to hold capacitance will decrease over time if left in an unheated and/or uncharged state.
They are used mainly as coupling, decoupling and filtering application where higher losses and reduced capacitance stability are permitted.
Marking of the temperature characteristics of capacitance for Class 2 ceramic capacitors

4.1 Marking of the temperature characteristics of capacitance for Class 2 ceramic capacitors

According to EIA STANDARD RS 198

Y5S

Lower category temperature

Temperature	Code
-55°C	X
-30°C	Y
+10°C	Z

Upper category temperature

Temperature	Code
+45°C	2
+65°C	4
+85°C	5
+105°C	6
+125°C	7
+150°C	8

Admissible capacitance change related to 25°C over the entire temperature range

Temperature	Code
±1.0%	A
±1.5%	B
±2.2%	C
±3.3%	D
±4.7%	E
±7.5%	F
±10%	P
±15%	R
±22%	S
+22% / -33%	T
+22% / -56%	U
+22% / -82%	V

GENERAL INFORMATION

4.2 Construction

The capacitance of a ceramic capacitor depends on the area of the electrodes (A), the thickness of the ceramic dielectric (t) and the dielectric constant of the ceramic material (ε_r):

$$C = \varepsilon_r \cdot \varepsilon_0 \cdot A/t$$

The rated voltage is dependent on the dielectric strength, which is mainly governed by the thickness of the ceramic dielectric and the ceramic structure. For this reason a reduction of the dielectric thickness is limited.

4.3 Manufacturing of ceramic capacitor

The raw materials are finely milled and carefully mixed. Thereafter the powder are calcined at temperatures between 1100 and 1300°C to achieve the required chemical composition. The resultant mass is reground and dopes and/or sintering means are added. The finely ground material is mixed with a solvent and binding matter.

4.4 Equivalent circuit for ceramic capacitor

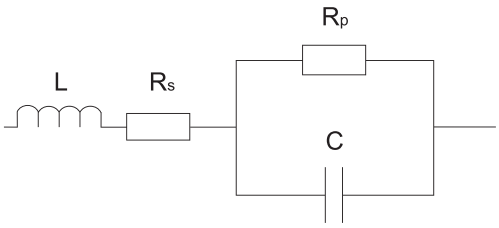

Fig.1 Equivalent circuit

C = Capacitance between the two electrodes, plus the stray capacitance at the edges and between the leads.

R_p = Resistance of insulation and dielectric. Generally is very high, and of decreasing importance with increasing frequency. R_p also represents the polarization losses of the material in an alternating electric field.

R_s = Losses in the leads, the electrodes and the contacts. Up to several hundredsof MHz the current penetration depth is greater than the conductor thickness so that no skin-effect occurs, For ceramic capacitor R_s is extremely low.

L = Inductance of the leads and the internal inductance of the capacitor; the latter, however, is almost negligible. The inductance is only important in high frequency applications, since the capacitor will act as an inductance when the frequency is higher than its resonance frequency.

4.5 Ceramic “ageing” of ceramic capacitor

Following the final heat treatment all Class 2 ceramic capacitor reduce their capacitance value with time approximately according to logarithmic law due to their special crystalline construction. This change is called “ageing”. If the capacitors are heat treated, for example when soldering, the capacity increases again to a higher value and the ageing process begins again. The level of this de-ageing is dependent on the temperature and the duration of the heat; an almost complete de-ageing is achieved at 150°C in one hour; these conditions also form the basis for reference measurements when testing.

The dissipation factor also ages, decreasing several times faster than the capacitance.
The capacitance change per time decade (ageing constant) differs for the various types of ceramic,but typical value can be taken from the formula below:

$$K = \frac{100 \cdot (C_{t1} - C_{t2})}{C_{t1} \cdot \log_{10} (t1/t2)}$$

$$C_{t2} = C_{t1} \cdot (1 \cdot K/100 \cdot \log_{10} [t1/t2]$$

where:
t1, t2 = Measuring time point (h)
C_{t1}, C_{t2} = capacitance values for the times t1 and t2
K = ageing constant (%)

The ageing constant may be declared by the manufacturer for a particular ceramic dielectric, or it may be determined by de-ageing the capacitor and measuring the capacitance at two known times thereafter.
Due to the ageing it is necessary to quote an age for reference measurements which can be related to the capacitance with fixed tolerance. According to EN 130700 this time period is 1000 hours since for practical purposes there is not much further loss of capacitance after this time.
If the shelf-life of the capacitor is known, the capacitance for t = 1000 h can be calculated with the ageing constant.
In order to avoid the influence of the ageing, it is important to de-age the capacitors before stress-testing. The following procedure is adopted:

- de-ageing at 150°C, 1 hour;
- storage for 24 hours at normal climate temperature;
- initial measurement;
- stress;
- de-ageing at 150°C, 1 hour;
- storage for 24 hours at normal climate temperature;
- final measurement

4.6 Climatic category

The large number of possible combinations of tests and severities may be reduced by a selection of a new standard groupings according to IEC 60068

According to EIA STANDARD RS 198

40 / 085 / 21

1st SET
Minimum ambient temperature of operation (Test cold)

2nd SET
Maximum ambient temperature of operatuin (Dry heat test)

3rd SET
Number of days (Damp heat steady state test)

The large number of possible combinations of tests and severities may be reduced by the selection of a few standard groupings according to IEC 60068-1.

CATEGORY EXAMPLES (according to IEC 60068-1)
25 / 085 / 04
25 / 085 / 21
40 / 085 / 21
55 / 125 / 21
55 / 125 / 56

First set two digits denoting the minimum ambient temperature of operation (Cold test)	
65	-65°C
55	-55°C
40	-40°C
25	-25°C
10	-10°C
00	0°C
05	+5°C

Second test three digits denoting the maximum ambient temperature (Dry heat test)	
155	+155°C
125	+125°C
110	+110°C
090	+90°C
085	+85°C
080	+80°C
075	+75°C
070	+70°C
065	+65°C
055	+55°C

Third test two digits denoting the number of days of the damp heat steady test (Ca)	
56	56 days
21	21 days
10	10 days
04	04 days
00	The component is not required to be exposed to damp heat.

4.7 Soldering

Ceramic capacitors are very sensitive to rapid changes in temperature. Subjecting the capacitor to excessive heating may result in thermal shocks that can crack the ceramic body. Similarly, excessive heating can cause the internal solder junction to melt.

4.8 Storage

The capacitor must not be stored in a corrosive atmosphere, where sulphide or chloride gas, acid, alkali or salt are present. Exposure of the components to moisture, should be avoided.
The solderability of the leads is not affected by storage of up to 24 months (temperature less than 30°C, relative humidity up to 60% RH).

5. Information on International Standards

- **SAFETY**

  Electronic devices such as TV sets, radios, computers, stereos, hair dryers, washing machines, etc. are all connected to the mains power supply and all generate «noise». Since these devices, even when in the off mode, are continuously connected to the mains they must comply with rigorous safety standards. In addition, the noise they generate can be picked up by TV sets and radios in the form of visual and audible distortions and, in the case of computers, as malfunctions and errors. This noise must be filtered or suppressed.

- **MAIN INTERNATIONAL COMMITTEES**

  - IEC (International Electrotechnical Commission)
  - CEN (European Committee for Standardization / Comité Européen de Normalisation)
  - CENELEC (European Committee for Electrotechnical Standardization / Comité Européen de Normalisation Electrotechnique)

  Note: EN . . . (European Standard / Norme Européenne)

- **NEW EUROPEAN STANDARD (EN 132400)**

  With the aim to standardize all the European National Standards and have only one Standard of reference in all the member countries of CENELEC, EN 132400 Standard was issued on 26th June, 1995 replacing all the European National Standards in force up to that date.

  The European Standard EN 132400 is identical to the International Standard IEC 60384-14 2nd Edition 1993. The IEC and CENELEC Committees are working in order to have the two standards identical also in the name: the future name of the European Standard will be “EN 60384-14”.

  The old European National Standards used IEC 384-14, Edition 1981 as a reference.

  Now the IEC 384-14 Edition 1981 has been replaced by IEC 60384-14 2nd Edition 1993.

  CENELEC members are: Austria, Belgium, Czech Republic, Denmark, Finland, France, Germany, Greece, Hungary, Iceland, Ireland, Italy, Luxembourg, Malta, Netherlands, Norway, Portugal, Slovakia, Spain, Sweden, Switzerland, UK.

  Effects of the coming into force of EN 132400 Standard:

  - since 26th June 1995 it is no longer possible to request approvals according to the old European National Standards (VDE, ASEV, IMQ, etc.);
  - any national body can issue the approval and its validity is recognized by the bodies of all the other CENELEC member countries with no need to repeat the tests;
  - marking: the coordinating committee has released their unified logo (**ENEC mark** = European Norms Electrical Certification) that is recognised throughout Europe as being equivalent to the individual marks of countries. It is issued for Luminaries and components, IT equipment, transformers, switches, suppression capacitors and filters.

    At present, the name of the standard EN 132400 or IEC 60384-14, is stamped near the logo of the institute performing the tests. Please note that if the component is approved according to the EN132400, it is no longer necessary to stamp the marking relevant to the old European National Standards;
  - approval certificates relevant to the old European National Standards: they remained valid till to 26th June 2000.

GENERAL INFORMATION

- **SIGNIFICANT TESTS OF THE IEC 60384-14 (EN 132400)**

Listed below you find the summary tables and some information on the most significant tests of the 60384-14 2nd Ed. (EN 132400) Standard (see table 1,2 and 3).

Table 1.

Test	IEC60384-14 (EN 132400) (Present Standard)
Impulse voltage before Endurance test	YES
Active Flammability test	YES
Passive Flammability test	YES

Table 2.

Application	Peak pulse in service	Peak impulse before Endurance test	Sub-class
High pulse application	> 2.5 kV; ≤4.0 kV	4 kV C ≤ 1uF 4/√C kV C > 1uF	X1
General purpose	≤ 2.5 kV	2,5 kV C ≤ 1uF 2,5/√C kV C > 1uF	X2
General purpose	≤ 1.2 kV	none	X3

Table 3.

Type of insulation bridged	Rated voltage	Peak impulse before endurance test	Sub – class IEC 60384-14 2nd Ed. (EN 132400) (Present Standard)
Double or reinforced insulation	≤ 500 Vac	8 kV	Y1
Basic or supplementary insulation	≥150 Vac ≤ 300 Vac	5 kV	Y2
Basic or supplementary insulation	≥150 Vac ≤ 250 Vac	None	Y3
Basic or supplementary insulation	< 150 Vac	2.5kV	Y4

GENERAL INFORMATION

- **CCA (CENELEC Certification Agreement) and CB (Certification Body) Test Certificate:**
  These have their origin from an agreement taken by the Certification Bodies. Following these agreements, certificates are issued which are called CCA and CB certificates.
  These certificates allow the mutual recognition at a European (CCA) and world (CB) level and are particularly effective in case the reference standards are the EN ...
  The countries accepting the CCA are:
  Austria, Belgium, Czech Republic, Denmark, Finland, France, Germany, Greece, Hungary, Iceland, Ireland, Italy, Luxembourg, Netherlands, Norway, Portugal, Slovakia, Slovenia, Spain, Sweden, Switzerland, UK.
  The countries accepting the CB are:
  Australia*, Austria, Belgium, Canada*, China, Czech. Republic, Denmark, Finland, France, Germany, Greece, Hungary, Iceland, India, Ireland, Israel, Italy, Japan, Korea Rep of, Netherlands, Norway, Poland, Russia, Singapore, Slovakia, Slovenian, South Africa, Spain, Sweden, Switzerland, Turkey, Ucraine, United Kingdom, U.S.A.*, Yugoslavia.
  The countries with an asterisk may require additional tests to obtain the approval.

- **MAIN STANDARDS FOR SUPPRESSION CAPACITORS**

EUROPE

Reference Standard: EN 132400:1994 + A1,2,3:1998 + A4:2001
This standard, already in force, is identical to IEC 60384-14 2nd Edition 1993+A1: 1995. It harmonizes and supersedes any previous national standards into only one European Standard

U.S.A.

Reference Standard: UL 1414 and UL 1283
UL 1414: Across-the-line applications
- Max capacitance value: 1µF
- Max operating temperature: +85°C
- Max Voltage: 250Vac
- UL 1414 approval covers also 1283 approval (not viceversa)

UL 1283: Electromagnetic Interference filters
- The UL 1283 approval can be requested also for capacitance values higher than 1µF, temperatures higher than +85°C and voltages higher than 250Vac.

CANADA

Reference Standard: CAN/CSA C22.2N°1 and CAN/CSA 384-14
CAN/CSA C22.2 N°1 : Across-the-line applications
- Max capacitance value: 1µF
- Max operating temperature: +85°C

CAN/CSA 384-14: Across-the-line applications
- The **CAN/CSA 384-14** approval is identical to IEC 60384-14 2nd Edition 1993+A1:1995.
  It harmonizes and can be requested also for capacitance values higher than 1µF, temperatures higher than +85°C and voltages higher than 250Vac.

CHINA

Reference Standard: GB/IT14472-1998
From August 1st 2003 all the old marks have been replaced by:
- **CCC** (China Compulsory Certification) which is compulsory and it is foreseen only for a list of more critical products.
  Capacitors are not included in this list (http://www.cqc.com.cn/ccc/catalogureeng.pdf)
- **CQC** is the general standard and mark of the new Body. It may be utilized in all other cases (e.g. for capacitors) and it is optional but very appreciated by Chinese Authorities and helpful in case it would became one day compulsory as per CCC.

TESTS RELATED TO IEC 60384-14 (2nd edition '93 plus amendment A1: 1995) AND EN 132400

According to IEC 60384-14 (2nd Edition 1993 plus amendment A1: 1995) and EN132400 our Y1, Y2 and X1 suppression capacitors withstand the following tests (type test):

- IMPULSE VOLTAGE TEST (before ENDURANCE TEST)

  V_{PEAK} = 8.0 kV (Class Y1)

  V_{PEAK} = 5.0 kV (Class Y2)

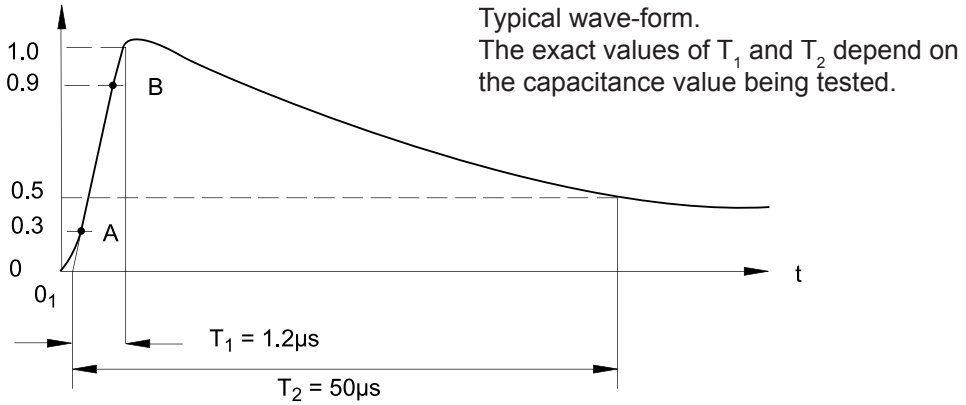

- ENDURANCE TEST
  The capacitors are tested for 1000 hours at upper category temperature with a voltage of 1.25 V_R for Class X2 and 1.7 V_R for Class Y2.
  Every hour the test voltage is increased up to 1000 V_{RMS}/50Hz for a period of 0.1 s.

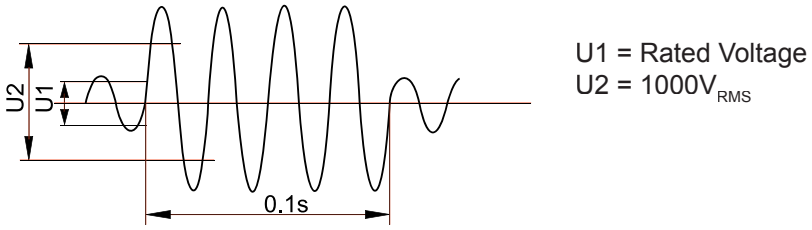

- ACTIVE FLAMMABILITY TEST - This test is not applicable to Y1 capacitor.
  The capacitors are tested at the rated voltage (Vac) at 50 Hz with superimposed 20 pulses at 4kV for Class X2 and 5kV for Class Y2 with an interval between the successive pulses of 5 seconds.
  The rated voltage is kept for 2 min after the last discharge. At the end of the test the capacitor does not burn (control made with the cheese-cloth wrapped on the body of capacitors).

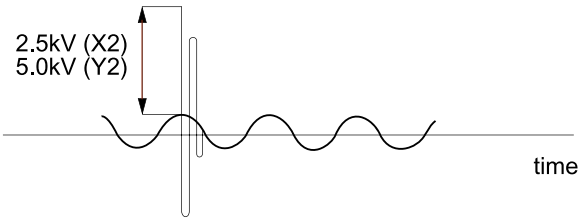

- CHARGE AND DISCHARGE TEST
  The capacitors are subjected to 10000 cycles of charge and discharge at the rate of approximately one operation per second.

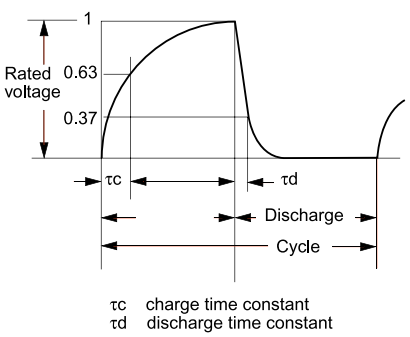

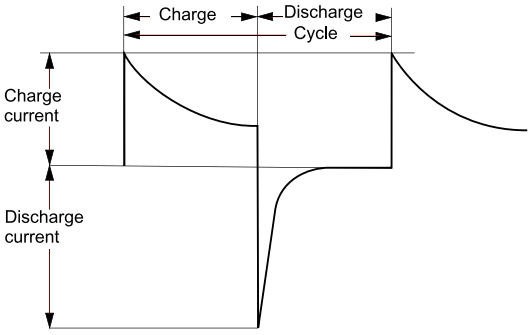

GENERAL INFORMATION

PRODUCT CODE SYSTEM AND DATE CODE

1	2	3	4	5	6	7	8	9	10	11	12	13	14	15

Digit 1 to 3 Series code.

Digit 4 to 6 Rated capacitance value.

Digit 4 to 5 indicate the first two digits Capacitance value and the 6 th digit indicates the number of zeros that must be added to obtain the Rated Capacitance in pF.

Digit 7. Capacitance tolerance:

Code letter	K	M
Capacitance tolerance	10%	20%

Digit 8. d.c. or a.c Rated Voltage :

N=1000Vdc,
P=2000Vdc,
Q=440V/X1, 250Vac/Y1,
R=400Vac/X1, 250Vac/Y2
S=440Vac/X1, 400Vac/Y1,

Digit 9 to 10 Size (D max):

D max	Digit 9 to 10
7	28
8	31
9	35
10	39
11	43
12	47
13	51
14	55
15	59
16	63
17	67
18	71
20	79
22	87

Digit 11 Pitch (mm)

C=5.0
D=7.5
F= 10.0
G=12.5

Digit 12 Temperature characteristic code

A=Y5U or better
B= Y5V
C=SL
E=Y5R
G=Y5P
H=X7R

Digit 13 to 14 Mechanical version and or packaging: see the pages related to each series.

Digit 15 Internal code.

GENERAL INFORMATION

PACKAGING

Ceramic Disc Capacitor

- **Ordering code**

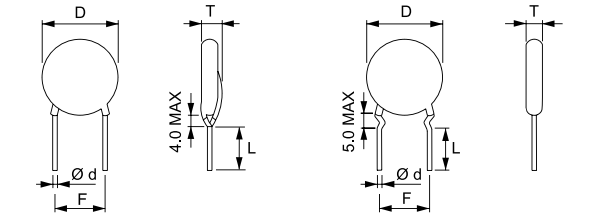

Digit 13 Lead style / Packaging	Digit 14 Lead length / Taped version
A = Loose straight (std version)	A = 25 mm (std version)
B = Loose kinked	B = 5 mm
C = Reel straight	C = 8 mm
D = Reel kinked	W = pitch of components 12.7 mm
F = Ammopack straight	Z = pitch of components 25.4 mm
G = Ammopack kinked	

- **Capacitors on tape**

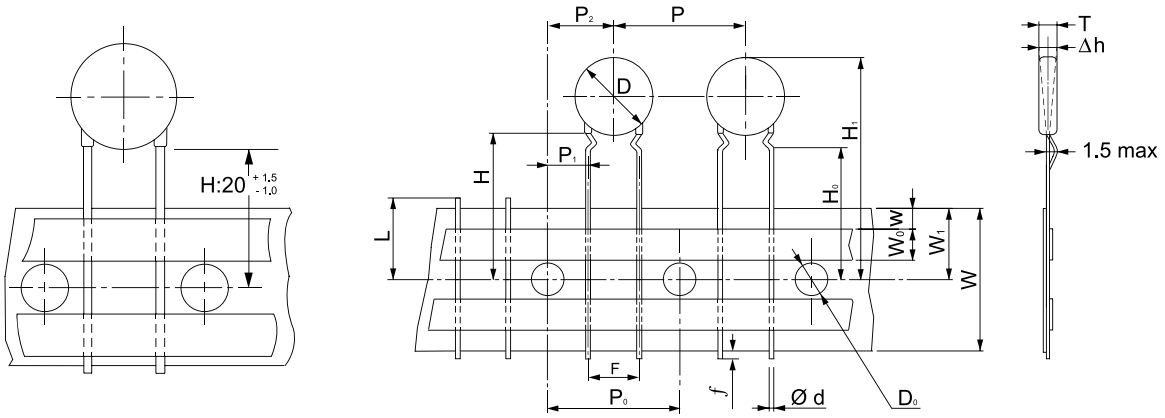

Parameter	Symbol	Taping Specifications					
		pitch 5	pitch 7.5	pitch 7.5	pitch 10	pitch 12.5	Tolerance
pitch of component	P	12.7	12.7	25.4	25.4	25.4	±1.0
feed-hole pitch *	P_0	12.7	12.7	12.7	12.7	12.7	±0.3
lead to lead distance	F	$5^{+0.8/-0.2}$	7.5±1.0	7.5±1.0	10±1.0	12.5±1.0	-
feed-hole centre to lead centre	P_1	3.85	8.95	8.95	7.62	6.45	±0.7
hole centre to component centre	P_2	6.35	-	-	-	-	±1.3
body diameter	D	11 max	11 max	11≤D≤16	16 max	16 max	-
body thickness	T	5.0					-
lead diameter	Ø d	0.6					+/-0.1
component alignment F-R	Δh	0					±2.0
tape width	W	18.0					+1.0/-0.5
hold-down tape width	W_0	5.0					min
hole position	W_1	9.0					±0.5
hold-down tape position	W_2	3.0					max
height of component from tape centre	H	20.0					+1.5/-1.0
lead wire clinch	H_0	16.0					±0.5
maximum component height	H_1	32.25	37.0				-
lead wire protrusion	∫	1.0					max
feed-hole diameter	D_0	4.0					±0.2
total tape thickness	t_1	0.6					±0.3
maximum thickness of tape and wire	t_2	1.5					-

All dimensions are in mm

* Available also 15 mm.

PACKAGING

Ceramic Disc Capacitor

- **Packaging quantities**

Table 1: Loose version

	OUTER CARTON	
Rated Cap	Leads length	Qty (pcs)
up to 3300pF		200 x 10
3900pF to 10000pF	≥24 mm	100 x 10
	<24 mm	200 x 10

Table 2: Taped version

Pitch	D (max)	Pitch of component	Reel	Ammopack
5	8 mm	12.7	1500 x 2	1000
	8<D≤11	12.7	1000 x 2	1000
7.5	≤8 mm	12.7	1500 x 2	1000
	9≤D≤11	12.7	1000 x 2	1000
	>11 mm	25.4	500 x 2	500
10	8≤D≤16	25.4	500 x 2	500
12.5	8≤D≤16	25.4	300 x 2	300

- **Reel and box dimensions**

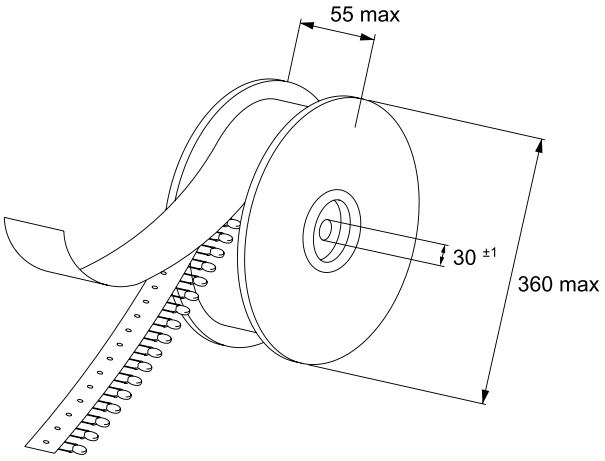

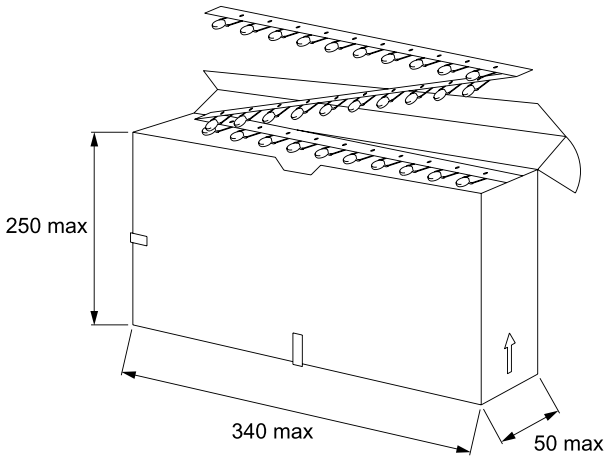

All dimensions are in mm

Electronic Components
KEMET
CHARGED.

Ceramic Capacitors

CONTENTS:

Series	Description			Page
KHB	Class 2	General purpose	1 - 2KVdc	15
KHC	Class 1	General purpose	1 - 2KVdc	17
KJN	Y1 (250Vac/400Vac) / X1 (440Vac)		4000Vac 60s	19
KJY	Y2 (250Vac) / X1 (400Vac)		2600Vac 60s	21

KHB Ceramic disc Capacitor

Class 2 – Y5P, 1KVand 2KV

- **Description**
  - The capacitors consist of a ceramic disc both sides of which are silver plated. Connection leads are made of tinned copper having a diameter of ϕd=0,65mm. The capacitor are supplied with straight leads. Encapsulation is made of flammable resistant epoxy resin in accordance with UL94 V0.
- **Applications**
  - General purpose
- **Features**
  - High reliability
  - High temperature operation, up to 85°C
  - High capacitance in small size
  - Flanged leads
- **Marking**

ARCOTRONICS' logo:
Series: KHB
Capacitance expressed in nF

- **1kV (D.C.)**

Max thickness T=4,5mm Standard version: lead length L=25 ± 1mm / straight leads / loose packaging.

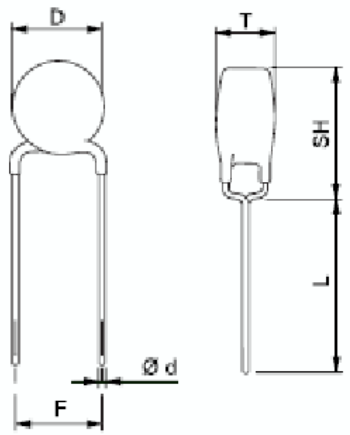

All dimensions are in mm

C (pF)	Tol %	D (max) (mm)	SH max straight (mm)	SH max kinked (mm)	Part Number	Temperature Coefficient
100	±10	5,5	7,5	8,5	KHB101KN24-G--A	Y5P -30°C to 85°C ± 10%
120	±10	5,5	7,5	8,5	KHB121KN24-G --A	
150	±10	5,5	7,5	8,5	KHB151KN24-G --A	
180	±10	5,5	7,5	8,5	KHB181KN24-G --A	
220	±10	5,5	7,5	8,5	KHB221KN24-G --A	
270	±10	5,5	7,5	8,5	KHB271KN24-G --A	
330	±10	5,5	7,5	8,5	KHB331KN24-G --A	
390	±10	5,5	7,5	8,5	KHB391KN24-G --A	
470	±10	5,5	7,5	8,5	KHB471KN24-G --A	
560	±10	6,5	8,5	9,5	KHB561KN28-G --A	
680	±10	6,5	8,5	9,5	KHB681KN28-G --A	
820	±10	6,5	8,5	9,5	KHB821KN28-G --A	
1000	±10	6,5	8,5	9,5	KHB102KN28-G --A	
1200	±10	7,5	9,5	10,5	KHB122KN31-G --A	
1500	±10	7,5	9,5	10,5	KHB152KN31-G --A	
1800	±10	8,5	10,5	11,5	KHB182KN35-G --A	
2200	±10	9,5	11,5	12,5	KHB222KN39-G --A	
2700	±10	10,5	12,5	13,5	KHB272KN43-G --A	
3300	±10	12,5	14,5	16,5	KHB332KN51-G --A	
3900	±10	12,5	14,5	16,5	KHB392KN51-G --A	
4700	±10	12,5	14,5	16,5	KHB472KN51-G --A	

Digit 11: C=pitch 5mm; D=pitch 7,5mm
Digit 13 and 14: Mechanical version and packaging (see page 12)

- **2kV (D.C.)**

Max thickness T=4,5mm Standard version: lead length L=25 ± 1mm / straight leads / loose packaging.

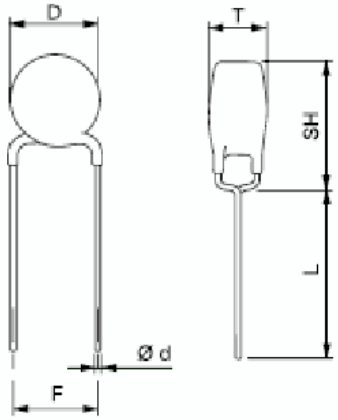

All dimensions are in mm

C (pF)	Tol %	D (max) (mm)	SH max straight (mm)	SH max kinked (mm)	Part Number	Temperature Coefficient
100	±10	7,5	9,5	10,5	KHB101KP31-G--A	Y5P -30°C to 85°C ± 10%
120	±10	7,5	9,5	10,5	KHB121KP31-G --A	
150	±10	7,5	9,5	10,5	KHB151KP31-G --A	
180	±10	7,5	9,5	10,5	KHB181KP31-G --A	
220	±10	8,5	10,5	11,5	KHB221KP35-G --A	
270	±10	8,5	10,5	11,5	KHB271KP35-G --A	
330	±10	8,5	10,5	11,5	KHB331KP35-G --A	
390	±10	8,5	10,5	11,5	KHB391KP35-G --A	
470	±10	8,5	10,5	11,5	KHB471KP35-G --A	
560	±10	9,5	11,5	12,5	KHB561KP39-G --A	
680	±10	9,5	11,5	12,5	KHB681KP39-G --A	
820	±10	10,5	12,5	13,5	KHB821KP43-G --A	
1000	±10	10,5	12,5	13,5	KHB102KP31-G --A	
1200	±10	11,5	13,5	14,5	KHB122KP47-G --A	
1500	±10	11,5	13,5	14,5	KHB152KP47-G --A	
1800	±10	12,5	14,5	15,5	KHB182KP51-G --A	
2200	±10	12,5	14,5	15,5	KHB222KP51-G --A	
2700	±10	14,5	16,5	17,5	KHB272KP59-G --A	
3300	±10	15,5	17,5	18,5	KHB332KP63-G --A	
3900	±10	17,5	19,5	20,5	KHB392KP71-G --A	
4700	±10	17,5	19,5	20,5	KHB472KP71-G --A	
5600	±10	19,5	21,5	22,5	KHB562KP79-G --A	
6800	±10	19,5	21,5	22,5	KHB682KP79-G --A	

Digit 11: C=pitch 5mm; D=pitch 7,5mm
Digit 13 and 14: Mechanical version and packaging (see page 12)

- **ELECTRICAL CHARACTERISTICS.**

The capacitors meet the essential requirements of IEC 60384-9, and EIA 198. Unless stated otherwise all electrical value apply at an ambient temperature of 20°C ±3°C, at normal atmospheric conditions.

Description	Value	
	1kV	2kV
Capacitance range at 1KHz, 1V (RMS)	100 to 10000pF	100 to 10000pF
Capacitance tolerance	± 10%	± 10%
D.C. test voltage, duration 1 minute	2 times of the rated voltage (50mA and under) for 1 to 5 seconds	
Insulation resistance at 500V (DC)	≥ 10,000MΩ	
Temperature coefficients on capacitance Y5P	±10% -30°C to +85°C	
Dissipation factor at 1KHz, 1V (RMS), 25 °C	Tan δ ≤ 2,5%	
Operating temperature range	-30 to +85°C	
Climatic category	25/85/21	

KHC Ceramic disc Capacitor

Class 1 - SL, 1KVand 2KV

- **Description**
  - The capacitors consist of a ceramic disc both sides of which are silver plated. Connection leads are made of tinned copper having a diameter of ϕd=0,65mm. The capacitor are supplied with straight leads. Encapsulation is made of flammable resistant epoxy resin in accordance with UL94 V0.
- **Applications**
  - General purpose

- **Features**
  - High reliability
  - High temperature operation, up to 125°C
  - High capacitance in small size
  - Flanged leads

- **MArking**

ARCOTRONICS' logo:
Series: KHC
Capacitance expressed in nF

- **1kV (D.C.)**

Max thickness T=4,5mm Standard version: lead length L=25 ± 1mm / straight leads / loose packaging.

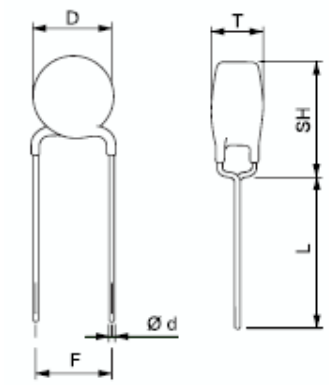

All dimensions are in mm

C (pF)	Tol* %	D (max) (mm)	SH max straight (mm)	SH max kinked (mm)	Part Number	Temperature Coefficient
15	±10	5,5	7,5	8,5	KHC150KN24-C--A	SL -25°C to 85°C +350-1000ppm/°C
22	±10	5,5	7,5	8,5	KHC220KN24-C --A	
56	±10	5,5	7,5	8,5	KHC560KN24-C --A	
68	±10	5,5	7,5	8,5	KHC680KN24-C --A	
82	±10	6,5	8,5	9,5	KHC820KN28-C --A	
100	±10	6,5	8,5	9,5	KHC101KN28-C --A	
120	±10	7,5	9,5	10,5	KHC121KN31-C --A	
150	±10	7,5	9,5	10,5	KHC151KN31-C --A	
180	±10	8,5	10,5	11,5	KHC181KN35-C --A	
220	±10	8,5	10,5	11,5	KHC221KN35-C --A	
270	±10	9,5	11,5	12,5	KHC271KN39-C --A	
330	±10	10,5	12,5	13,5	KHC331KN43-C --A	
390	±10	10,5	12,5	13,5	KHC391KN43-C --A	
470	±10	12,5	14,5	15,5	KHC471KN51-C --A	
560	±10	14,5	16,5	17,5	KHC561KN59-C --A	

Digit 11: C=pitch 5mm; D=pitch 7,5mm
Digit 13 and 14: Mechanical version and packaging (see page 12)

* It's available also 5% of tolerance (special version)

- **2kV (D.C.)**

Max thickness T=4,5mm Standard version: lead length L=25 ± 1mm / straight leads / loose packaging.

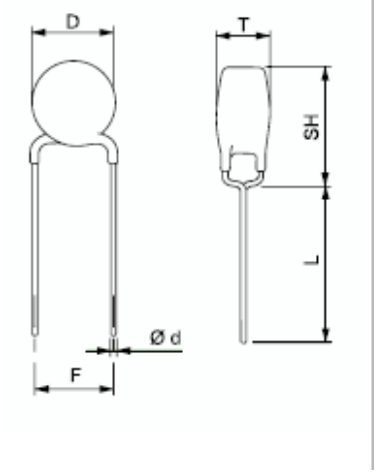

All dimensions are in mm

C (pF)	Tol %	D (max) (mm)	SH max straight (mm)	SH max kinked (mm)	Part Number	Temperature Coefficient
22	±10	8,5	9,5	10,5	KHC220KP35-C--A	SL -25°C to 85°C +350-1000ppm/°C
56	±10	8,5	9,5	10,5	KHC560KP35-C --A	
68	±10	9,5	10,5	11,5	KHC680KP39-C --A	
82	±10	9,5	10,5	11,5	KHC820KP39-C --A	
100	±10	9,5	10,5	11,5	KHC101KP39-C --A	
120	±10	10,5	11,5	12,5	KHC121KP43-C --A	
150	±10	10,5	11,5	12,5	KHC151KP43-C --A	
180	±10	12,5	13,5	14,5	KHC181KP51-C --A	
220	±10	13,5	14,5	15,5	KHC221KP51-C --A	
270	±10	14,5	15,5	16,5	KHC271KP59-C --A	
330	±10	15,5	16,5	17,5	KHC331KP63-C --A	
390	±10	16,5	17,5	18,5	KHC391KP67-C --A	

Digit 11: C=pitch 5mm; D=pitch 7,5mm
Digit 13 and 14: Mechanical version and packaging (see page 12)

- **ELECTRICAL CHARACTERISTICS.**

The capacitors meet the essential requirements of IEC 60384-9, and EIA 198. Unless stated otherwise all electrical value apply at an ambient temperature of 20°C ±3°C, at normal atmospheric conditions.

Description	Value	
	1kV	2kV
Capacitance range at 1MHz, 3V (RMS), 25°C	15 to 560pF	22 to 390pF
Capacitance tolerance	± 10%	± 10%
D.C. test voltage, duration 1 minute	2 times of the rated voltage (50mA and under) for 1 to 5 seconds	
Insulation resistance at rated voltage (DC)	≥ 10,000MΩ	
Temperature coefficients on capacitance SL	+350-1000ppm/°C -25°C to +125°C	
Q factor at 1kHz, 1V (RMS), 25 °C	C<30pF …….Q≥400 + 20C C≥30pF .....Q≥1000	
Operating temperature range	-55 to +125°C	
Climatic category	55/125/21	

KJN Ceramic Disc Capacitor

Y1 Class: 250Vac - X1 Class: 440Vac

■ Description

- The capacitors consist of a ceramic disc both sides of which are silver plated. Connection leads are made of tinned copper having a diameter of Ød = 0.65mm.
  The capacitors are supplied with straight leads
  Encapsulation is made of flammable resistant epoxy resin in accordance with UL94 V0.

■ Applications

- Across-the-line
- Line by-pass
- Antenna coupling
- Interference suppression

■ Features

- 4kV (AC) test voltage
- High temperature operation, up to 125°C
- Complying with EN 132400 and IEC 60384-14, 2nd edition, including amendment 1.1995

■ Marking

ARCOTRONICS' logo: AV
Series: KJN
Rated voltage & Subclass (IEC 60384-14):440~X1 / 250~Y1
Rated voltage: cUL1414: 250~
Capacitance expressed in nF
Approval marks

Max thickness T = 6.5mm
Standard version: lead length L=25±1mm / straight leads / loose packaging

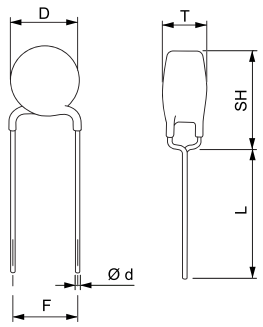

All dimensions are in mm

C (pF)	Tol %	D (max) (mm)	SH max straight (mm)	SH max kinked (mm)	Part Number	Temperature coefficient
100	±10	9	13	14	KJN101KQ35-G- -A	Y5P -25°C to 85°C ±10%
150	±10	9	13	14	KJN151KQ35-G- -A	
220	±10	9	13	14	KJN221KQ35-G- -A	
330	±10	9	13	14	KJN331KQ35-G- -A	
470	±10	9	13	14	KJN471KQ35-G- -A	
560	±10	10	14	15	KJN561KQ39-G- -A	
680	±10	10	14	15	KJN681KQ39-G- -A	
1000	±20	9	13	14	KJN102MQ35-A- -A	Y5U -25°C to 85°C + 22% -56%
1500	±20	11	15	16	KJN152MQ43-A- -A	
2200	±20	12	16	17	KJN222MQ47-A- -A	
3300	±20	14	18	19	KJN332MQ55-A- -A	
3900	±20	15	19	20	KJN392MQ59-A- -A	
4700	±20	15	19	20	KJN472MQ59-A- -A	
1000	±20	9	13	14	KJN102MQ35-B- -A	Y5V -25°C to 85°C + 22% -82%
1500	±20	9	13	14	KJN152MQ35-B- -A	
2200	±20	10	14	15	KJN222MQ39-B- -A	
3300	±20	12	16	17	KJN332MQ47-B- -A	
3900	±20	13	17	18	KJN392MQ51-B- -A	
4700	±20	14	18	19	KJN472MQ55-B- -A	

Digit 11: F=pitch 10mm; G=pitch 12.5mm
Digit 13 and 14: Mechanical version and packaging (see page 12)

■ ELECTRICAL CHARACTERISTICS

The capacitors meet the essential requirements of IEC 60384-14, 2nd edition. Unless stated otherwise all electrical values apply at an ambient temperature of 20°C ±3°C, at normal atmospheric conditions.

Description	Value
Capacitance range at 1kHz, 1V (RMS)	100 to 4700 pF
Capacitance tolerance	± 10% up to 680pF; ± 20%
Rated AC voltage:	Y1 = 250V; 50/60Hz X1 = 440V; 50/60Hz
Dielectric strength (AC)	4000V for 60 s
Dielectric strength of coating (AC)	4000V for 60 s
Test voltage (AC)	4000V for 2 s
Insulation resistance at 500V (DC)	≥10000MΩ
Temperature coefficients on capacitance	Y5P (up to 680pF) Y5U from 1000pF to 4700pF Y5V from 1000pF to 4700pF
Dissipation factor at 1 kHz, 1V (RMS)	2.5% max
Operating temperature range	-25 to +125°C
Climatic category	25/125/21
Approvals	ENEC (EN132400/60384-14, 2nd ed.) - APPROVED cUL1414 - APPROVED

Statements of suitability for certain applications are based on our knowledge of typical operating conditions for such applications, but are not intended to constitute – and we specifically disclaim – any warranty concerning suitability for a specific customer application or use. This Information is intended for use only by customers who have the requisite experience and capability to determine the correct products for their application. Any technical advice inferred from this Information or otherwise provided by us with reference to the use of our products is given gratis, and we assume no obligation or liability for the advice given or results obtained.

Statements of suitability for certain applications are based on our knowledge of typical operating conditions for such applications, but are not intended to constitute – and we specifically disclaim – any warranty concerning suitability for a specific customer application or use. This Information is intended for use only by customers who have the requisite experience and capability to determine the correct products for their application. Any technical advice inferred from this Information or otherwise provided by us with reference to the use of our products is given gratis, and we assume no obligation or liability for the advice given or results obtained.

KJN Ceramic disc Capacitor

Y1 Class: 400Vac – X1 Class: 440Vac

- **Description**
  - The capacitors consist of a ceramic disc both sides of which are silver plated. Connection leads are made of tinned copper having a diameter of ϕd=0,65mm.The capacitor are supplied with straight leads. Encapsulation is made of flammable resistant epoxy resin in accordance with UL94 V0.
- **Applications**
  - Across-the-line
  - Line by-pass
  - Antenna coupling.
  - Interference suppression
- **Features**
  - 4kV (AC) test voltage
  - High temperature operation, up to 125°C
  - Complying with EN 132400 and IEC 60384-14, 2nd edition, including amendment 1.1995.
- **MArking**

ARCOTRONICS' logo:
Series: KJN
Rated voltage & Subclass (IEC 60384-14): 440~X1 / 400~Y1
Rated voltage:cUL 1414: 250~
Capacitance expressed in nF
Approval marks

Max thickness T=8mm

Standard version: lead length L=25 ± 1mm / straight leads / loose packaging.

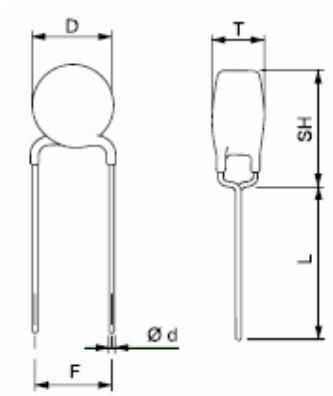

All dimensions are in mm

C (pF)	Tol %	D (max) (mm)	SH max straight (mm)	SH max kinked (mm)	Part Number	Temperature Coefficient
100	±10	9	13	14	KJN101KS35-G --A	Y5P -25°C to 85°C ±10
150	±10	9	13	14	KJN151KS35-G --A	
220	±10	9	13	14	KJN221KS35-G --A	
330	±10	9	13	14	KJN331KS35-G --A	
470	±10	10	14	15	KJN471KS39-G --A	
560	±10	10	14	15	KJN561KS39-G --A	
680	±10	11	15	16	KJN681KS43-G --A	
1000	±20	9	13	14	KJN102MS35-A --A	Y5U -25°C to 85°C + 22% -56%
1500	±20	11	15	16	KJN152MS43-A --A	
2200	±20	13	17	18	KJN222MS51-A --A	
3300	±20	14	18	19	KJN332MS55-A --A	
3900	±20	15	19	20	KJN392MS59-A --A	
4700	±20	16	20	21	KJN472MS63-A --A	
1000	±20	9	13	14	KJN102MS35-B --A	Y5V -25°C to 85°C + 22% -82%
1500	±20	9	13	14	KJN152MS35-B --A	
2200	±20	10	14	15	KJN222MS39-B --A	
3300	±20	12	16	17	KJN332MS47-B --A	
3900	±20	13	17	18	KJN392MS51-B --A	
4700	±20	14	18	19	KJN472MS55-B --A	

Digit 11: F=pitch 10mm; G=pitch 12mm
Digit 13 and 14: Mechanical version and packaging (see page 12)

- **ELECTRICAL CHARACTERISTICS.**

The capacitors meet the essential requirements of IEC 60384-14, 2nd edition. Unless stated otherwise all electrical value apply at an ambient temperature of 20°C ±3°C, at normal atmospheric conditions.

Description	Value
Capacitance range at 1KHz, 1V (RMS)	100 to 4700pF
Capacitance tolerance	± 10% up to 680pF; ± 20%
Rated AC voltage:	Y1 = 400V; 50/60Hz X1= 440V; 50/60Hz
Dielectric strength (AC)	4000V for 60s
Dielectric strength of coating (AC)	4000V for 60s
Test voltage (AC)	4000V for 2s
Insulation resistance at 500V (DC)	≥ 10000MΩ
Temperature coefficients on capacitance	Y5P up to 680pF Y5U from 1000pF to 4700pF Y5V from 1000pF to 4700pF
Dissipation factor at 1KHz, 1V (RMS)	2,5% max
Operating temperature range	-25 to +125°C
Climatic category	25/125/21
Approvals	ENEC (EN132400/60384-14, 2nd ed.) – APPROVED CUL 1414 - APPROVED

Statements of suitability for certain applications are based on our knowledge of typical operating conditions for such applications, but are not intended to constitute – and we specifically disclaim – any warranty concerning suitability for a specific customer application or use. This Information is intended for use only by customers who have the requisite experience and capability to determine the correct products for their application. Any technical advice inferred from this Information or otherwise provided by us with reference to the use of our products is given gratis, and we assume no obligation or liability for the advice given or results obtained.

KJY Ceramic Disc Capacitor

Y2 Class: 250Vac - X1 Class: 400Vac

■ Description

- The capacitors consist of a ceramic disc both sides of which are silver plated. Connection leads are made of tinned copper having a diameter of Ød = 0.65mm.
  The capacitors are supplied with straight leads.
  Encapsulation is made of flammable resistant epoxy resin in accordance with UL94 V0.

■ Applications

- Across-the-line
- Line by-pass
- Antenna coupling
- Interference suppression

■ Features

- High temperature operation, up to 125°C
- Complying with EN 132400 and IEC 60384-14, 2nd edition, including amendment 1.1995

■ Marking

ARCOTRONICS' logo:
Series: KJY
Rated voltage & Subclass (IEC 60384-14):400~X1 / 250~Y2
Rated voltage: cUL1414: 250~
Capacitance expressed in nF
Approval marks

Max thickness T = 5mm
Standard version: lead length L=25±1mm / straight leads / loose packaging

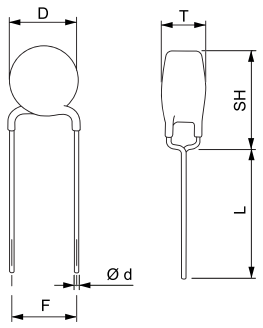

All dimensions are in mm

C (pF)	Tol %	D (max) (mm)	SH max straight (mm)	SH max kinked (mm)	Part Number	Temperature coefficient
100	±10	8	12	13	KJY101KR31-G- -A	Y5P -25°C to 85°C ±10%
150	±10	8	12	13	KJY151KR31-G- -A	
220	±10	8	12	13	KJY221KR31-G- -A	
330	±10	8	12	13	KJY331KR31-G- -A	
470	±10	8	12	13	KJY471KR31-G- -A	
560	±10	9	13	14	KJY561KR35-G- -A	
680	±10	9	13	14	KJY681KR35-G- -A	
1000	±10	10	14	15	KJY102KR39-G- -A	
1000	±20	8	12	13	KJY102MR31-A- -A	Y5U -25°C to 85°C +22% -56%
1500	±20	9	13	14	KJY152MR35-A- -A	
2200	±20	10	14	15	KJY222MR39-A- -A	
2500	±20	11	15	16	KJY252MR43-A- -A	
3300	±20	12	16	17	KJY332MR47-A- -A	
3900	±20	13	17	18	KJY392MR51-A- -A	
4700	±20	14	18	19	KJY472MR55-A- -A	
1000	±20	8	12	13	KJY102MR31-B- -A	Y5V -25°C to 85°C +22% -82%
1500	±20	8	13	14	KJY152MR31-B- -A	
2200	±20	9	13	14	KJY222MR35-B- -A	
3300	±20	10	14	15	KJY332MR39-B- -A	
3900	±20	11	15	16	KJY392MR43-B- -A	
4700	±20	12	16	17	KJY472MR47-B- -A	
10000	±20	16	20	21	KJY103MR63-B- -A	

Digit 11: C=pitch 5mm; D=pitch 7.5mm; F=pitch 10mm; G=pitch 12.5mm
Digit 13 and 14: Mechanical version and packaging (see page 12)

■ ELECTRICAL CHARACTERISTICS

The capacitors meet the essential requirements of IEC 60384-14, 2nd edition. Unless stated otherwise all electrical values apply at an ambient temperature of 20°C ±3°C, at normal atmospheric conditions.

Description	Value
Capacitance range at 1kHz, 1V (RMS)	100 to 10000 pF
Capacitance tolerance	± 10% up to 1000pF; ± 20% from 1000 to 10000pF
Rated AC voltage:	Y2 = 250V; 50/60Hz X1 = 400V; 50/60Hz
Dielectric strength (AC)	2600V for 60 s
Dielectric strength of coating (AC)	2600V for 60 s
Test voltage (AC)	2600V for 2 s
Insulation resistance at 500V (DC)	≥10000MΩ
Temperature coefficients on capacitance	Y5P (up to 1000pF) / Y5U from 1000pF to 4700pF Y5V from 1000pF to 10000pF
Dissipation factor at 1 kHz, 1V (RMS)	2.5% max
Operating temperature range	-25 to +125°C
Climatic category	25/125/21
Approvals	ENEC (EN132400/60384-14, 2nd ed.) - APPROVED cUL1414 - APPROVED

Mouser Electronics

Authorized Distributor

Click to View Pricing, Inventory, Delivery & Lifecycle Information:

KEMET:

KJN222MQ47FAAAA KJN222MS51FAAAA KJN102MQ35FAFZA KJN472MS63FAAAA KJN472MS63GAAAA KJY102MR31DACWA KJY471KR31DGAAA KJN472MQ55FBAAA KJN472MQ55FBCZA KJY102MR31DAAAA KJN222MQ47FAFZA KJY472MR47DBFZA KJY472MR47DBAAA KJY102MR31CAAAA KJY222MR39DAAAA KJY222MR39DAFWA KJN472MQ59GAGZA KJN222MQ39FBGZA KJY103MR63CBAAA KJN472MQ59GAAAA KHB681KN28CGDWA KJY222MR35DBAAA KHB472KN51DGAAA KJN102MS35GACZA KJN222MQ39FBAAA KJN472MQ59FAAAA KJY472MR55DAFZA KHB101KN24DGAAA KJN332MQ55GAAAA KJY472MR55DAAAA